Application Techniques

Original Instructions

Allen-Bradley

Drives in Common Bus Configurations with PowerFlex 755TM Bus Supplies

Allen-Bradley • Rockwell Software

Rockwell Automation

Important User Information

Read this document and the documents listed in the additional resources section about installation, configuration, and operation of this equipment before you install, configure, operate, or maintain this product. Users are required to familiarize themselves with installation and wiring instructions in addition to requirements of all applicable codes, laws, and standards.

Activities including installation, adjustments, putting into service, use, assembly, disassembly, and maintenance are required to be carried out by suitably trained personnel in accordance with applicable code of practice.

If this equipment is used in a manner not specified by the manufacturer, the protection provided by the equipment may be impaired.

In no event will Rockwell Automation, Inc. be responsible or liable for indirect or consequential damages resulting from the use or application of this equipment.

The examples and diagrams in this manual are included solely for illustrative purposes. Because of the many variables and requirements associated with any particular installation, Rockwell Automation, Inc. cannot assume responsibility or liability for actual use based on the examples and diagrams.

No patent liability is assumed by Rockwell Automation, Inc. with respect to use of information, circuits, equipment, or software described in this manual.

Throughout this manual, when necessary, we use notes to make you aware of safety considerations.

	WARNING: Identifies information about practices or circumstances that can cause an explosion in a hazardous environment, which may lead to personal injury or death, property damage, or economic loss.
	ATTENTION: Identifies information about practices or circumstances that can lead to personal injury or death, property damage, or economic loss. Attentions help you identify a hazard, avoid a hazard, and recognize the consequence.
IMPORTANT	Identifies information that is critical for successful application and understanding of the product.

Labels may also be on or inside the equipment to provide specific precautions.

	SHOCK HAZARD: Labels may be on or inside the equipment, for example, a drive or motor, to alert people that dangerous voltage may be present.
	BURN HAZARD: Labels may be on or inside the equipment, for example, a drive or motor, to alert people that surfaces may reach dangerous temperatures.
	ARC FLASH HAZARD: Labels may be on or inside the equipment, for example, a motor control center, to alert people to potential Arc Flash. Arc Flash will cause severe injury or death. Wear proper Personal Protective Equipment (PPE). Follow ALL Regulatory requirements for safe work practices and for Personal Protective Equipment (PPE).

Appendix B

Power Component Accessories

An increasing number of drive systems in a wide range of applications and power ranges are being configured today in common bus configurations. These system configurations provide significant advantages, such as design flexibility, higher efficiency, and cost savings.

It is the objective of this publication to provide the necessary guidelines, considerations, and limitations for the proper application of Allen-Bradley® drives used in common bus configurations.

For Allen-Bradley common bus standard products, see the Common DC Bus Selection Guide, publication DRIVES-SG001.

Definition of Common Bus Configuration

The regenerative bus supply, active front end (AFE) topology uses a pulse-width modulated (PWM) controlled insulated-gate bipolar transistor (IGBT) converter, which enables bidirectional power flow from and back to the incoming AC line. This configuration will contain one or more common bus inverters connected directly to the DC common bus.

SupportPlus

For technical support and consultation on high-performance drive applications, the SupportPlus program is offered. SupportPlus provides expert-level Rockwell Automation system engineers to support the engineering team of the user. SupportPlus engineers work with users to design the appropriate architecture, configure drives, and recommend programming techniques. They also provide application assistance on the most effective ways to implement the control solution.

Service	Cat. No.
Design consultation	Contact Rockwell Automation
On-site power analysis	

For more information, see http://www.ab.com/support/abdrives/files/supportplus.pdf.

Additional Resources

These documents contain additional information concerning related products from Rockwell Automation.

Table 1 - Additional Resources

Resource	Description
PowerFlex® 750-Series Drive Technical Data, publication 750-TD001	Provies technical data on PowerFlex 750-Series drives.
PowerFlex 755TM IP00 Open Type Kits Technical Data, publication 750-TD101 PowerFlex 750-Series Products with TotalFORCE™ Control Technical Data, publication 750-TD100	Provides detailed information on: • Kit selection • Kit ratings and specifications • Option specifications
PowerFlex 750-Series Products with TotalFORCE™ Control Technical Data, publication 750-TD100	
1321 Power Conditioning Products Technical Data, publication 1321-TD001	Information on line reactors and isolation transformers.
Kinetix® Servo Drives Specifications Technical Data, publication KNX-TD003	Product specifications for Kinetix Integrated Motion over the EtherNet/IP network, Integrated Motion over Sercos interface, EtherNet/IP networking, and component servo drive families.
PowerFlex 750-Series Products with TotalFORCE Control Installation Instructions, publication 750-IN100	Provides the basic steps to install PowerFlex 755TL low harmonic drives, PowerFlex 755TR regenerative drives, and PowerFlex 755TM drive systems.
PowerFlex 755TM IP00 Open Type Kits Installation Instructions, publication 750-IN101	Provides instructions to install IP00 Open Type kits in user-supplied enclosures.
PowerFlex Drives with TotalFORCE Control Programming Manual, publication 750-PM100	Provides detailed information on: • I/O, control, and feedback options • Parameters and programming • Faults, alarms, and troubleshooting
PowerFlex 750-Series Products with TotalFORCE Control Hardware Service Manual, publication 750-TG100	Provides detailed information on: • Preventive maintenance • Component testing • Hardware replacement procedures
Wiring and Grounding Guidelines for Pulse Width Modulated (PWM) AC Drives, publication DRIVES-IN001	Provides basic information to install, protect, wire, and ground pulse width modulated (PWM) AC drives.
Industry Installation Guidelines for Pulse Width Modulated (PWM) AC Drives, publication DRIVES-AT003	Provide basic information for different enclosure systems, environmental/location considerations, and power and grounding considerations needed to properly install a Pulse Width Modulated (PWM) AC drive.
PowerFlex 750-Series AC Drives Installation Instructions, publication 750-IN001	Provides the basic steps to install PowerFlex 750-Series drives.
PowerFlex 750-Series EMC Plate and Core(s) - Frames 1…7 Installation Instructions, publication 750-IN006	Installation information for PowerFlex 750-Series EMC plate and cores.
PowerFlex 755 AC Drives EMC Cores Installation Instructions, publication 750-IN024	Installation information for PowerFlex 755 AC drives EMC cores.
PowerFlex 750-Series Drive Programming Manual, publication 750-PM001	Information on programming PowerFlex 750-Series drives.
1321-M Common Mode Chokes Installation Instructions, publication 1321-IN001	Information on installing 1321-M common mode chokes.
Kinetix 5700 Servo Drives User Manual, publication 2198-UM002	Information on installing, configuring, startup, troubleshooting, and applications for your Kinetix servo drive system.
Kinetix 5700 Drive Systems Design Guide, publication KNX-RM010	System design guide to determine and select the required (drive specific) drive module, power accessory, connector kit, motor cable, and interface cable catalog numbers for your drive and motor/actuator motion control system. Included are system performance specifications and torque/speed curves (rotary motion) and force/velocity curves (linear motion) for your motion application.
Kinetix 5700 System Mounting Toolkit Installation Instructions, publication 2198-IN012	Information on installing the Kinetix 5700 system mounting toolkit.
Kinetix 5700 Capacitor Modules Installation Instructions, publication 2198-IN008	Information on installing Kinetix 5700 capacitor modules.
Kinetix 5700 DC-bus Connector Kits Installation Instructions, publication 2198-IN007	Information on installing Kinetix 5700 DC-bus connector kits.
Kinetix 5000 Shared-bus Connection System Installation Instructions, publication 2198-IN005	Information on installing shared-bus connector kits for the Kinetix 5500 and Kinetix 5700 servo drive families.
2090-Series Single Motor Cables Installation Instructions, publication 2090-IN051	Information on installing 2090-Series single motor cables.

You can view or download publications at http://www.rockwellautomation.com/global/literature-library/overview.page. To order paper copies of technical documentation, contact your local Allen-Bradley distributor or Rockwell Automation sales representative.

To find your local Allen-Bradley distributor or sales representative, visit http://www.rockwellautomation.com/locations.

Notes:

DC Bus Wiring Guidelines

This section provides guidelines for DC bus wiring of common bus systems.

Drive Line-up

Generally, it is desirable to have the drive line-up match the machine layout. However, if a mix of drive frame sizes is used in the line-up, the system layout requires the largest drives to be located closest to the rectifier source. The rectifier source can be anywhere within the system line-up. Often, it is advantageous to place the rectifier in the middle of the line-up to minimize the distance to the farthest loads. Shorter distances can minimize the energy that is stored in the parasitic inductance of the bus structure, which helps to lower peak bus voltages and mitigate voltage transients during operation.

To minimize system inductance, Rockwell Automation recommends that the system DC bus remain uninterrupted. The use of cables to connect additional drive system cabinets to the system bus is not recommended.

Figure 1 - Example System (shown for illustrative purposes only)

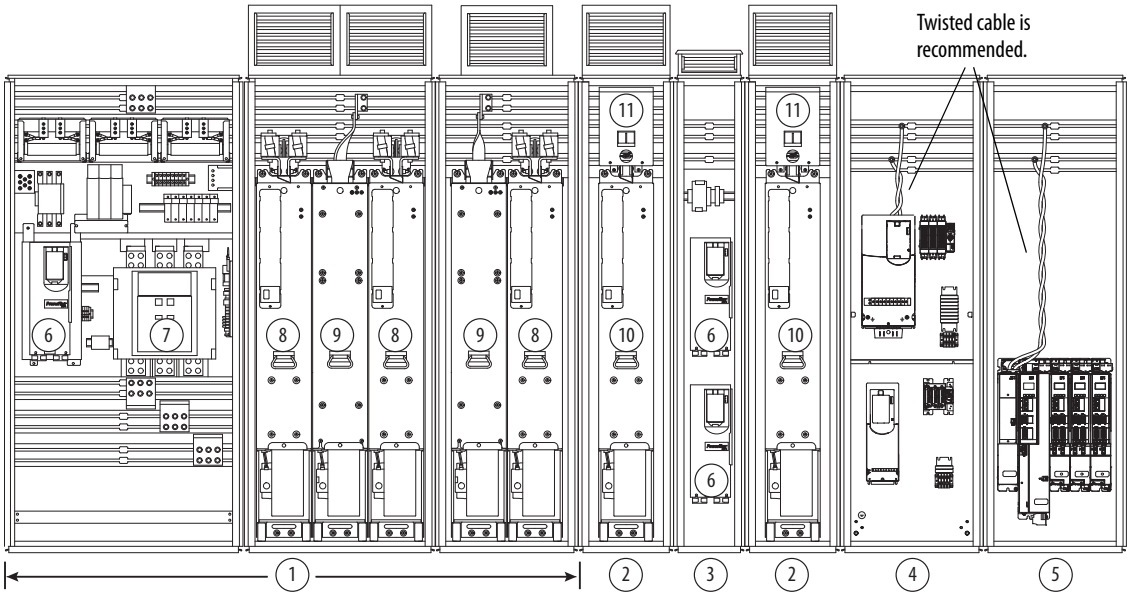

Item	Description
1	Frame 10 PowerFlex® 755TM regenerative bus supply
2	Frame 8 PowerFlex 755TM common bus inverter
3	Control bay
4	PowerFlex 750-Series drives (frames 1…7 only)

Item	Description
5	Kinetix® 5700 servo drive cluster
6	Control pod
7	AC precharge module
8	Line side conveter

Item	Description
9	LCL filter
10	Motor side inverter
11	DC precharge module (optional)

DC Bus Connections

The interconnection of drives to the DC bus, and the inductance levels between the drives, must be kept to a minimum for optimum system operation.

Bus Bar Versus Cable

Continuous bus bar is required. When using cables to connect drives to the system bus within a cabinet, adhere to the following guidelines:

- Keep the cable lengths as short as possible.
- Twist cable where possible, approximately one twist per foot.
- Use cable that is appropriately rated for the voltage class of the product.
- The DC bus connections cannot be 'daisy chained'. Use a 'star' configuration of the DC bus connections as shown in Figure 2 to accommodate proper fusing.

Figure 2 - Star Configuration of Common Bus Connections

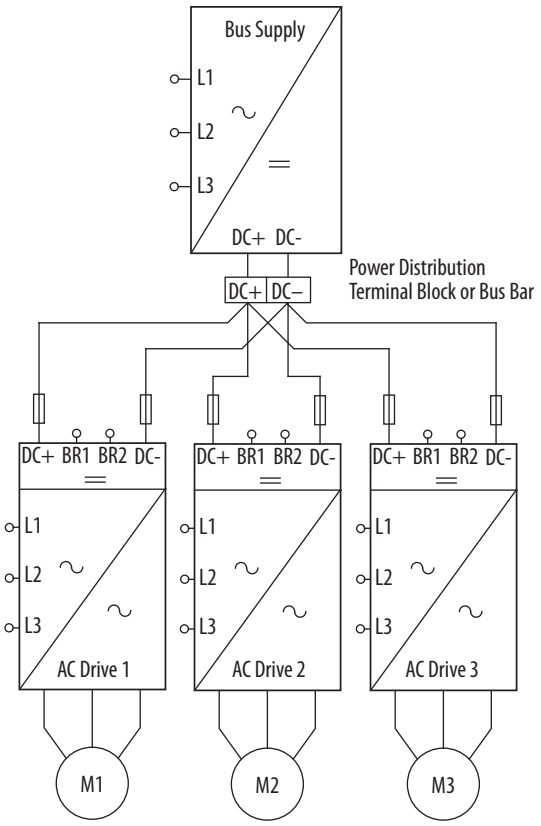

Precharge

Precharge is the process through which the DC bus voltage of a drive is gradually increased. During this increase in DC bus voltage, the DC bus filtering capacitors are charged in a controlled manner. The precharge assembly can be part of the drive design or it can be externally provided and controlled.

ATTENTION: An external source of power can be present. To avoid an electric shock hazard, verify that the AC power supply has been removed before any maintenance is performed.

If an external voltage source is used to power the logic boards of the drives, take precautions to control the precharge sequence. We recommend using the 'Precharge Enable' digital input on the drive for common bus operation. The logic input can be coordinated through a PLC or system-level control to sequence the precharge. The sequencing lets charge time constants for various horsepower drives settle out before the precharge is completely done. Generally, a three second delay is acceptable after power has been applied.

IMPORTANT The 'Precharge Enable' digital input is only available on PowerFlex 750-Series and PowerFlex 755TM common bus inverter drives. The Kinetix 5700 servo drives do not have a 'Precharge Enable' digital input.

When multiple drives are connected through disconnects to a common DC bus, it is necessary to provide an input to the drive that enables the precharge to finish. Often, an auxiliary contact on the drive disconnect switch controls this input.

Figure 3 - Common DC Bus Example

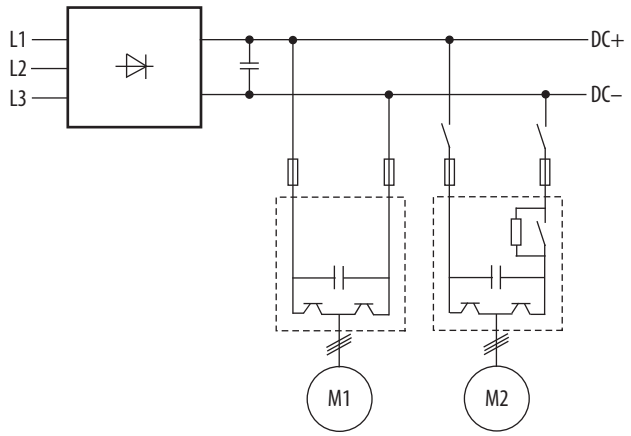

ATTENTION: The bus capacitors in the individual drives act as a low-impedance voltage source. Extra care is needed when connecting individual drives to an energized bus.

ATTENTION: Kinetix servo drives have no method for the user to control the precharge sequence. Never connect Kinetix servo drives to an energized DC bus. Severe drive and/or equipment damage can result due to an uncontrolled precharge of the Kinetix drives.

If 'Precharge Enable' is selected as a digital input, it must be energized to let the initial bus precharge complete. If it is de-energized, it is treated as a coast-to-stop command and it forces the drive to the initial bus-precharge state. Fuse failure is probable unless coordination of precharge circuits in individual drives is implemented.

PowerFlex 750-Series Frame 1…4 AC Drives

For PowerFlex 750-Series frame 1...4 AC drives, the precharge hardware is on the power circuit board. It is composed of a resistor in series with the positive DC bus, between the DC link and the bus capacitors. The resistor has a relay contact that is connected in parallel, which closes to bypass the precharge resistor when the bus precharge level is attained. The precharge function operates the same way for either AC or DC input power.

Figure 4 - AC and DC Input Schematic for PowerFlex 750-Series Frame 1…4 AC Drives

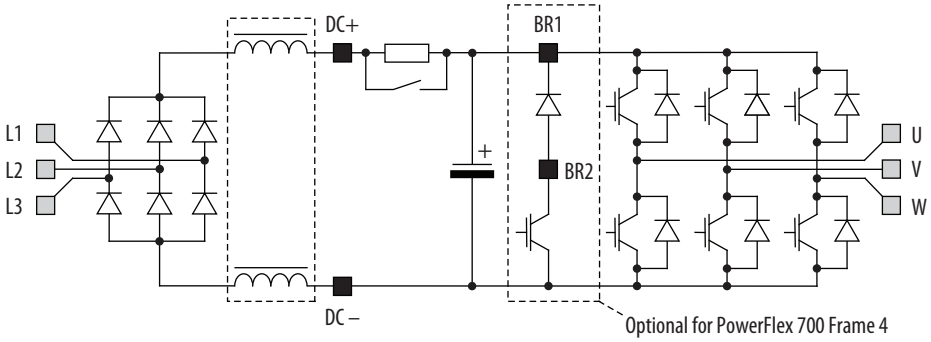

PowerFlex 750-Series Frame 5…7 DC Input 'Common Bus' Drives

The precharge has a resistor in series with the positive DC bus, ahead of the bus capacitors. A silicon controlled rectifier (SCR) is connected in parallel. Once the SCR is gated on, the precharge resistor is bypassed.

Figure 5 - DC Input Schematic for PowerFlex 750-Series Frame 5…7 DC Input Drives (Input Type Cat. No. Position 5, Code 4)

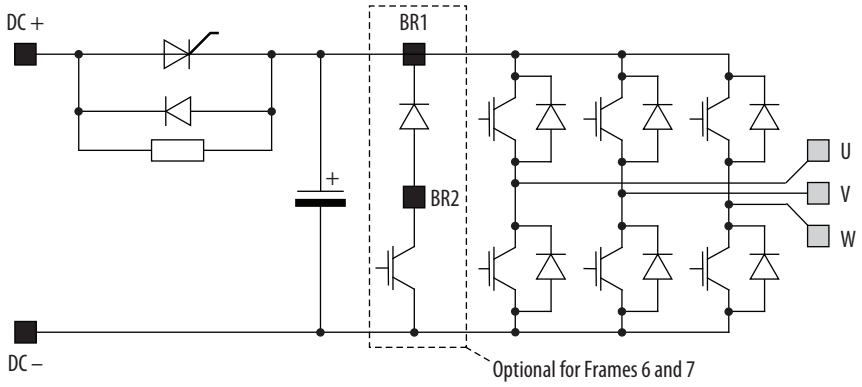

PowerFlex 755TM Frame 8...12 Common Bus Inverters

For PowerFlex 755TM frame 8...12 common bus inverters, the precharge function is implemented with a resistor and automatic bypass in both the positive and negative DC bus between the DC input and the bus capacitors. When the DC bus precharge level has been reached, the motor-operated circuit breaker (MCCB) closes, bypassing the resistor.

Figure 6 - DC Input Schematic for PowerFlex 755TM Frame 8…12 Common Bus Inverters (Input Type Cat. No. Position 5, Code D or E)

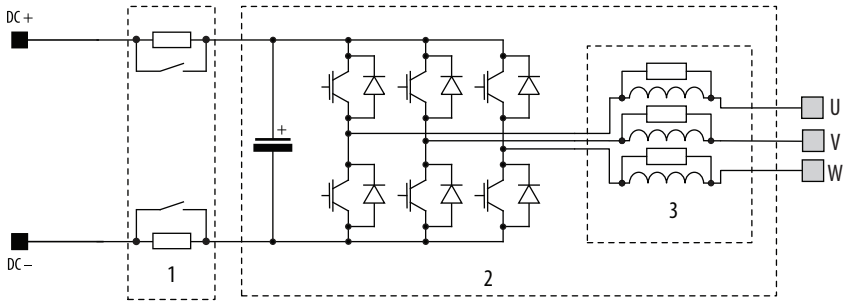

This figure represents a PowerFlex 755TM frame 8 common bus inverter with an optional DC precharge and a reflective wave filter.

1. Optional pre-charge – based on position 5 - input type catalog code selection.
   D = common bus with DC precharge and E = common bus without DC precharge.
   If input type = E (common bus without DC precharge), the DC fusing is contained within the DC bus connector assembly.
2. Power module (roll-in).
3. Optional reflective wave filtering – based on position 11, filtering and CM cap configuration selection.

Kinetix 5700 Single-axis and Dual-axis Servo Drives

The Kinetix 5700 is a multi-axis, servo drive system with a power range of 1.6 kW...60 kW. The Kinetix 5700 system power supplies zero-stack and seamlessly connect with single-axis and dual-axis servo drives. However, if the drive system is used with an external DC-bus power supply, or a larger common bus system with multiple drive families, the 2198-CAPMOD-2240 capacitor module is required along with the optional 2198-CAPMOD-DCBUS-IO extension module to provide connections to the DC+ and DC- lug terminals.

See Kinetix 5700 Servo Drives on page 31 for more information. The converter that supplies power to the bank of Kinetix drives must pre-charge all the capacitance, as the inverters themselves do not have pre-charge capability. See the following one-line diagrams.

Figure 7 - Kinetix 5700 Single-axis Servo Drive Block Diagram

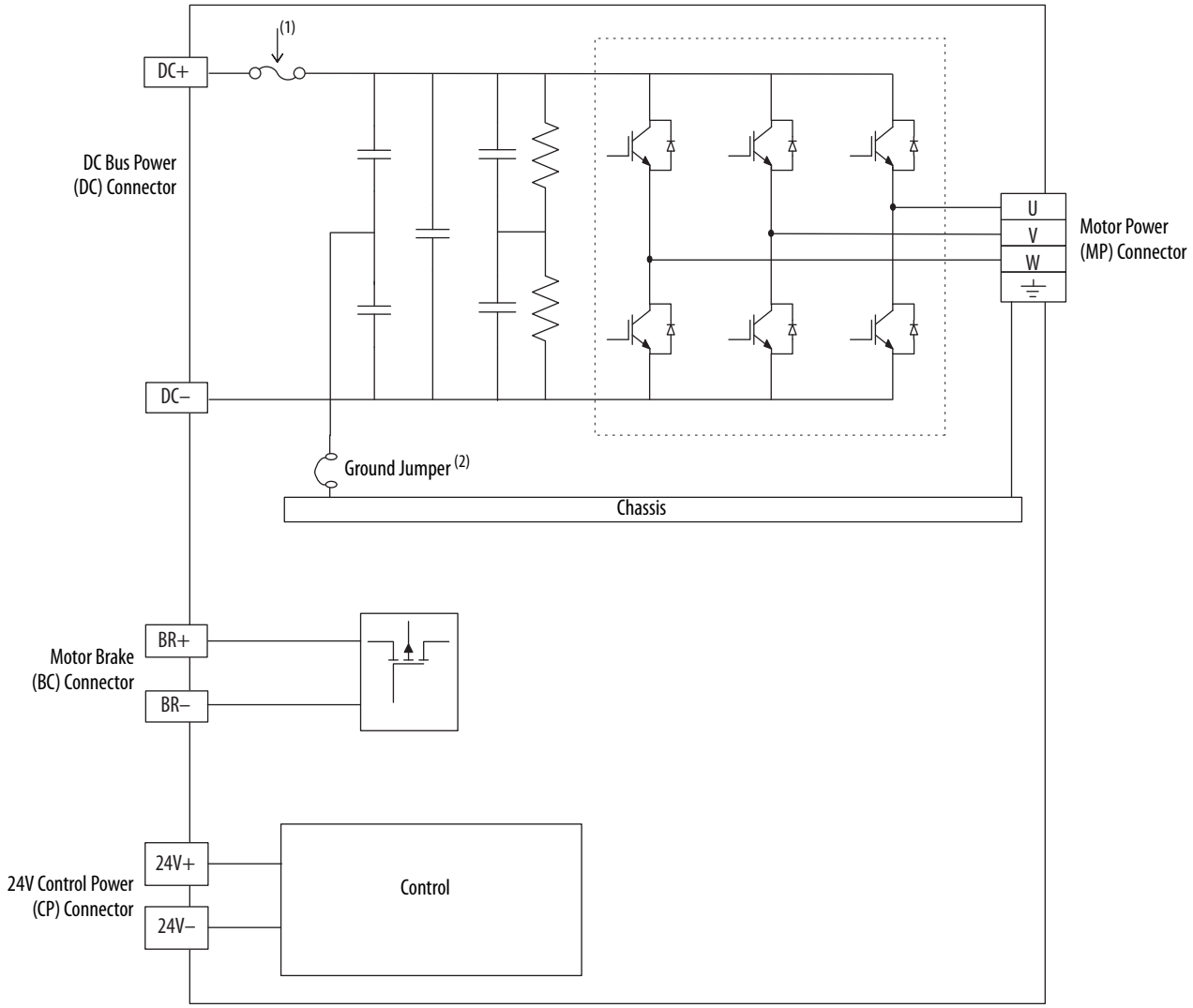

(1) Fuse blown detection internal to the module.
(2) Ground jumper in the installed (default) configuration.

Figure 8 - Kinetix 5700 Dual-axis Servo Block Diagram

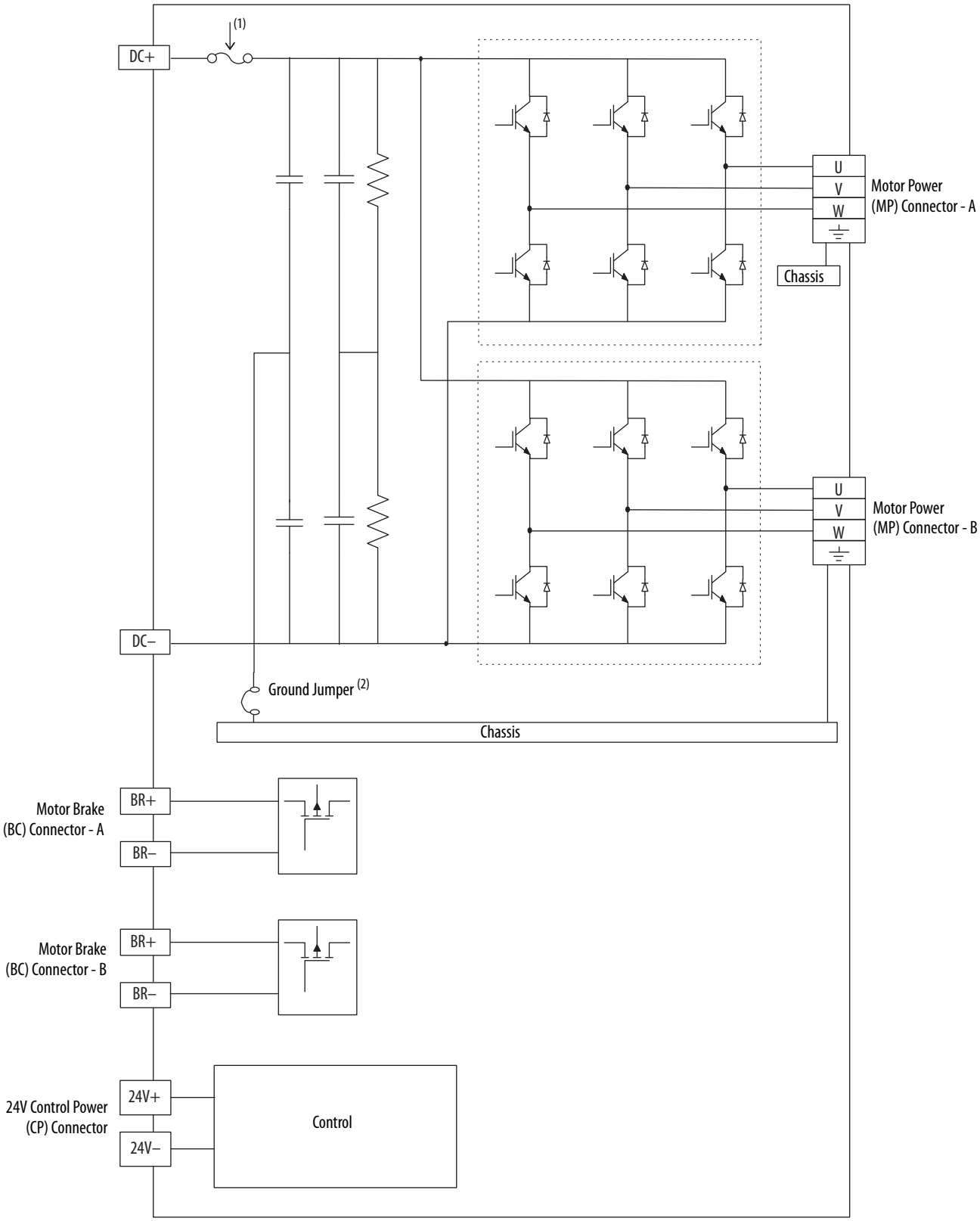

(1) Fuse blown detection internal to the module.
(2) Ground jumper in the installed (default) configuration.

Notes:

Regenerative Bus Supply Configuration

This system uses a PWM-controlled IGBT converter for full regeneration of power to the AC line. The regenerative bus supply puts energy back onto the distribution system instead of dissipating energy with resistor braking technology. This configuration provides low AC line harmonics and can be used to meet IEEE-519 when used with the appropriate filtering.

Supported Products

At the time of publication, the following products are supported.

Products	Voltage Class (V AC)	Supported Drives	DC Bus Voltage Overvoltage Trip(1)
PowerFlex® 755TM regenerative bus supply(2)(3)	400/480	400/480V AC PowerFlex 750-Series: frames 1…7(4)(5)	815V DC
		400/480V AC PowerFlex 755TM: frames 8…12(6)	815V DC
		Kinetix® 5700 single-axis servo drives: (2198-S*xxx*-ERS*x*)(7)	810V DC
		Kinetix 5700 dual-axis servo drives: (2198-Dxxx-ERS*x*)(7)	810V DC
	600/690	600V AC PowerFlex 750-Series: frames 3…5(4)(8)	1013V DC
		600/690V AC PowerFlex 755TM: frames 8…12(6)(9)	1172V DC
		600/690V AC PowerFlex 750-Series: frame 6…7(4)(9)	1162V DC

(1) The regenerative limit for the PowerFlex 755TM regnerative bus supply must be less than the DC bus overload trip voltage of the drive with the lowest DC bus overload trip voltage.
(2) 20J catalog number.
(3) Drive input type (position 5 of catalog number) = F (regenerative and low harmonic AFE).
(4) Drive input type (position 5 of catalog number) = 1 (AC input with precharge, includes DC terminals) or 4 (DC input with precharge).
(5) PowerFlex 750-Series frame 5…7 DC input version drives with precharge must be selected.
(6) Drive input type (position 5 of catalog number) = D (common bus with DC precharge) or E (common bus without DC precharge).
(7) To connect the Kinetix 5700 servo drives to a DC bus system, use a capacitor module. The 2198-CAPMOD-2240 capacitor module is used in applications with up to 100 A maximum external DC bus current. Add the 2198-CAPMOD-DCBUS-IO extension module to the left or right of the capacitor module when the external DC bus current exceeds 100 A, up to a maximum of 200 A.
(8) Cannot be used on a 690V AC system.
(9) Based on DC bus overvoltage trip values, these drives cannot be combined on the same system with 600V AC PowerFlex 750-Series frame 3…5 drives.

Typical System Configurations

This section describes typical configurations for regenerative bus supply systems, which feature the following characteristics:

- Type of grounding (solid ground, high-resistance ground, or ungrounded)
- One regenerative bus supply that provides power to one or multiple drives

Figure 9 - Solid Ground System with Single Regenerative Bus Supply and Multiple AC Drives

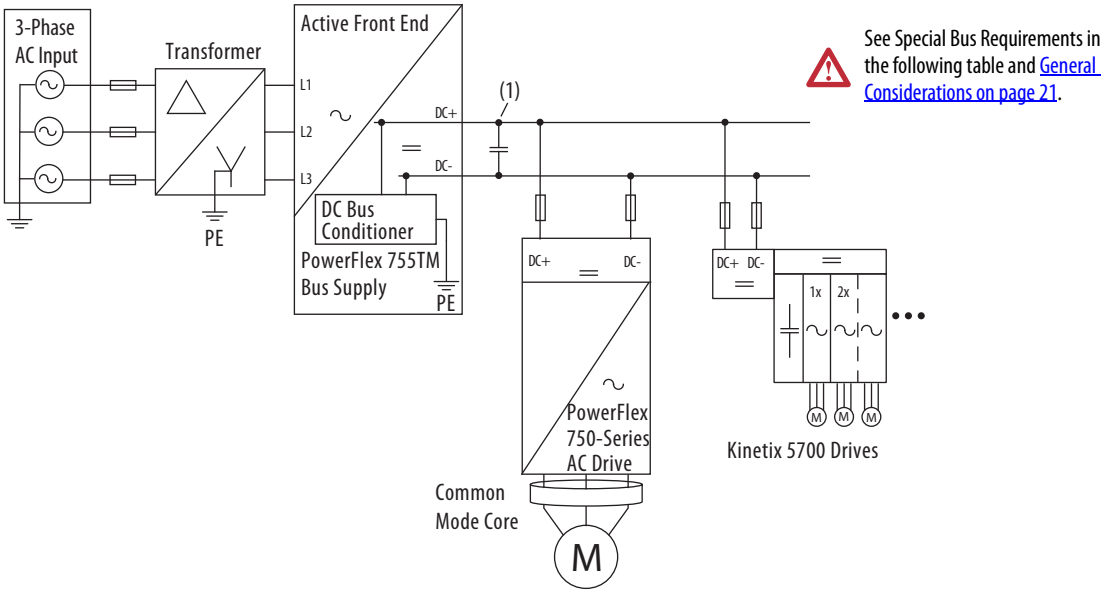

(1) A capacitor bank may be required. See the following table and Bus Supply Capacitors on page 55 for more information.

System		Regenerative Bus Supply			Drive		Common Mode Core(8)	DC Bus Conditioner(11)
Grounding Type	Voltage	Qty.	Type	Frame Size	Qty.	Type		
Solid	400/480/600(1)/690	1	PowerFlex 755TM bus supply(2)(3)	8…12	1…20(4)	PowerFlex 750-Series: frames 1…3(5)	1321-M048(9)	- P50 power option not required
						PowerFlex 750-Series: frames 4 …6(5)	1320-M180(9)	
						PowerFlex 750-Series: frames 7(5)	SK-Y1-CMCORE1(9)	
						PowerFlex 755TM common bus inverters: frames 8…12(3)(6)(7)	Not required(10)	
						Kinetix 5700 single-axis servo drives	Not required	
						Kinetix 5700 dual-axis servo drives	Not required	

(1) At 600 volts, PowerFlex 750-Series frame 3…5 drives cannot be used on the same bus as PowerFlex 750-Series frame 6…7 drives and PowerFlex 755TM common bus inverters: frames 8…12.
(2) 20J product with input type (position 5 of catalog number) = F (regenerative and low harmonic AFE).
(3) See Appendix B for guidance on -P46 system DC bus selection.
(4) The recommended maximum total number of drives on a single regenerative bus supply system is 20. For more than 20 drives, consult the factory. See SupportPlus on page 5 for more information.
(5) Drive input type (position 5 of catalog number) = 1 (AC input with precharge, includes DC terminals) or 4 (DC input with precharge) respectively.
(6) Input type (position 5 of catalog number) = D (common bus with DC precharge) or E (common bus without DC precharge).
(7) See Appendix B for guidance on control pod selection.
(8) Common mode core is not required for the DC output of the PowerFlex 755TM regenerative bus supply.
(9) For PowerFlex 750-Series frame 1…7 drives, cores are required on inverter AC output only.
(10) For PowerFlex 755TM common bus inverters, there are no provisions for AC output common mode cores; however, an optional reflective wave filter is available. See catalog number position 11 - filtering and CM cap configuration, EMI solutions.
(11) The appropriate number of bus conditioner units internal to the PowerFlex 755TM regenerative bus supply will be added without needing to add a -P50 power option to the catalog number.

Figure 10 - High-resistance Ground System with Single Regenerative Bus Supply and AC Drives

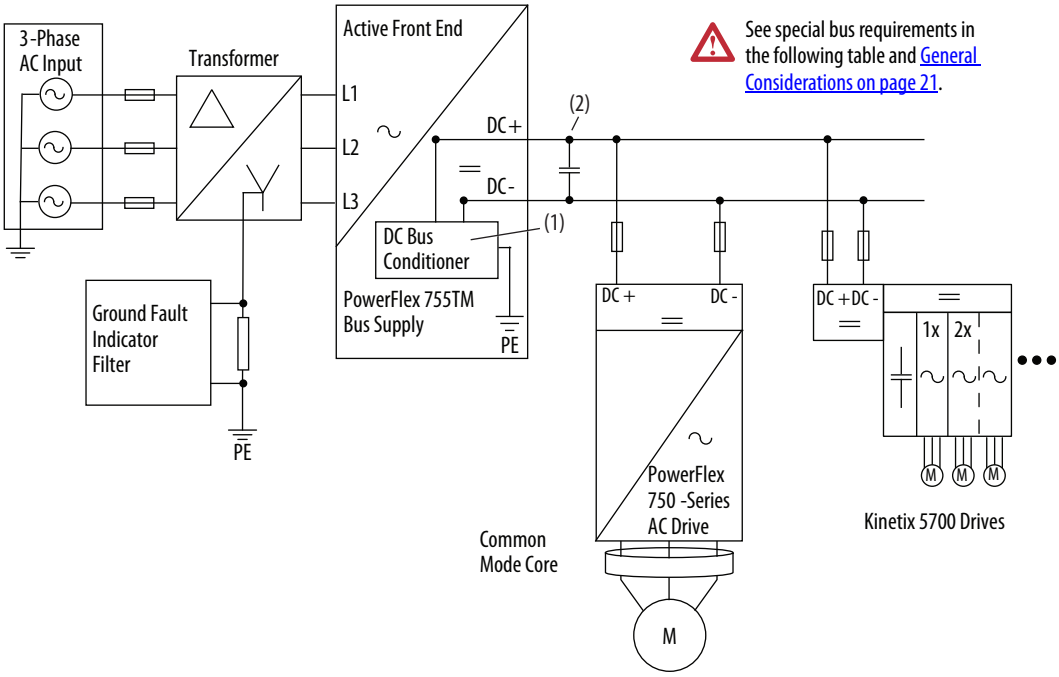

(1) The required DC bus conditioner for the system is contained within the PowerFlex 755TM regenerative bus supply.
(2) A capacitor bank is required. See the following table and Bus Supply Capacitors on page 55 for more information.

System		AFE			Drive		Common Mode Core [8]	DC Bus Conditioner[11]	Ground Fault Indicator Filter[12]
Grounding Type	Voltage	Qty.	Type	Frame Size	Qty.	Type			
High-resistance ground	400/480/ 600[1]/690	1	PowerFlex 755TM bus supply[2][3]	8…12	1… 20[4]	PowerFlex 750-Series: frames 1…3[5]	1321-M048[9]	-P50 power option required on PowerFlex 755TM bus supply only	Yes
						PowerFlex 750-Series: frames 4 …6[5]	1320-M180[9]		
						PowerFlex 750-Series: frames 7[5]	SK-Y1-CMCORE1[9]		
						PowerFlex 755TM common bus inverters: frames 8…12[3][6][7]	Not required[10]		
						Kinetix 5700 single-axis servo drives	Not required		
						Kinetix 5700 dual-axis servo drives	Not required		

(1) At 600 volts, PowerFlex 750-Series frame 3…5 drives cannot be used on the same bus as PowerFlex 750-Series frame 6…7 drives and PowerFlex 755TM common bus inverters: frames 8…12.
(2) 20J product with input type (position 5 of catalog number) = F (regenerative and low harmonic AFE).
(3) See Appendix B for guidance on -P46 system DC bus selection.
(4) The recommended maximum total number of drives on a single regenerative bus supply system is 20. For more than 20 drives, consult the factory. See SupportPlus on page 5 for more information.
(5) Drive input type (position 5 of catalog number) = 1 (AC input with precharge, includes DC terminals) or 4 (DC input with precharge) respectively.
(6) Input type (position 5 of catalog number) = D (common bus with DC precharge) or E (common bus without DC precharge).
(7) See Appendix B for guidance on control pod selection.
(8) Common mode core is not required for the DC output of the PowerFlex 755TM regenerative bus supply.
(9) For PowerFlex 750 Series frame 1…7 drives, cores are required on inverter AC output only.
(10) For PowerFlex 755TM common bus inverters, there are no provisions for AC output common mode cores; however, an optional reflective wave filter is available. See catalog number position 11 - filtering and CM cap configuration, EMI solutions.
(11) The appropriate number of bus conditioner units will be added to the PowerFlex 755TM regenerative bus supply when adding a -P50 power option to the catalog number.
(12) See Ground Fault Indicator Filter on page 59 for recommendations.

Figure 11 - Ungrounded System with Single Regenerative Bus Supply and Multiple AC Drives

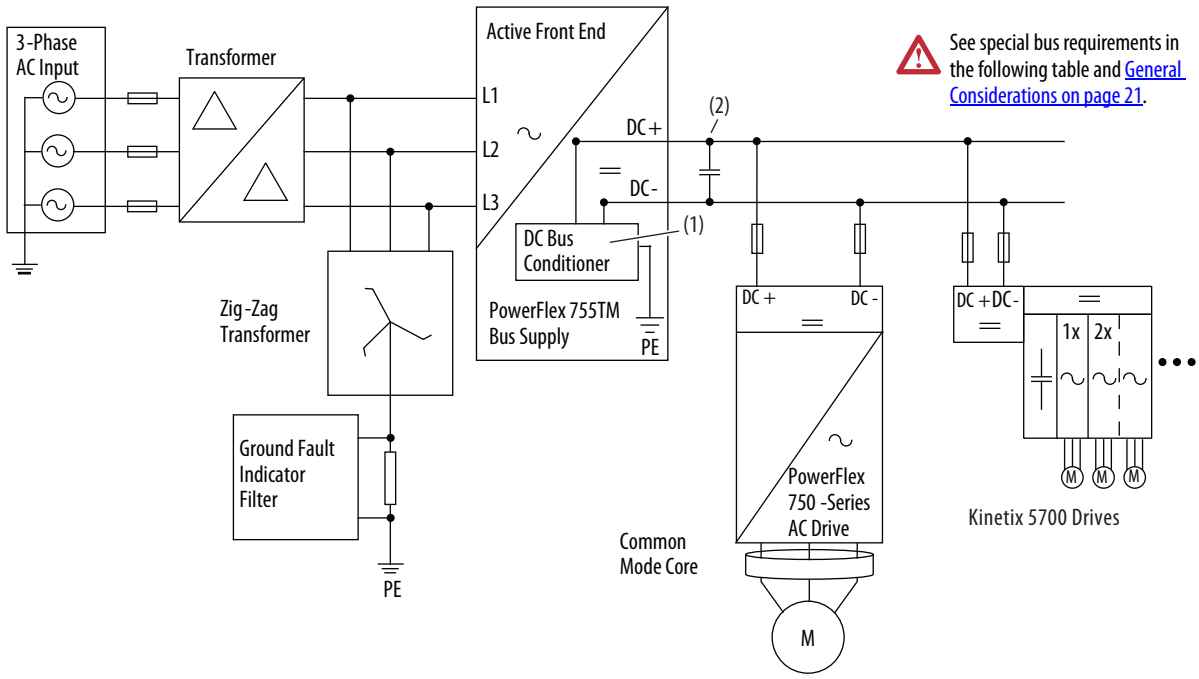

(1)The required DC bus conditioner for the system is contained within the PowerFlex 755TM regenerative bus supply.
(2)A capacitor bank is required. See the following table and Bus Supply Capacitors on page 55 for more information.

System		Regenerative Bus Supply			Drive		Common Mode Core [8]	DC Bus Conditioner[11]	Ground Fault Indicator Filter[12]	Zig Zag Transformer Required[13]
Grounding Type	Voltage	Qty.	Type	Frame Size	Qty.	Type				
Ungrounded system	400/480/ 600[1]/690	1	PowerFlex 755TM bus supply[2][3]	8…12	1…20[4]	PowerFlex 750-Series: frames 1…3[5]	1321-M048[9]	-P50 power option required on PowerFlex 755TM bus supply only	Yes	Yes
						PowerFlex 750-Series: frames 4…6[5]	1320-M180[9]			
						PowerFlex 750-Series: frame 7[5]	SK-Y1-CMCORE1[9]			
						PowerFlex 755TM common bus inverters: frames 8…12[3][6][7]	Not required[10]			
						Kinetix 5700 single-axis servo drives	Not required			
						Kinetix 5700 dual-axis servo drives	Not required			

(1) At 600 volts, PowerFlex 750-Series frame 3…5 drives cannot be used on the same bus as PowerFlex 750-Series frame 6…7 drives and PowerFlex 755TM common bus inverters: frame 8…12.
(2) 20J product with input type (position 5 of catalog number) = F (regenerative and low harmonic AFE).
(3) See Appendix B for guidance on -P46 system DC bus selection.
(4) The recommended maximum total number of drives on a single regenerative bus supply system is 20. For more than 20 drives, consult the factory. See SupportPlus on page 5 for more information.
(5) Drive input type (position 5 of catalog number) = 1 (AC input with precharge, includes DC terminals) or 4 (DC input with precharge) respectively.
(6) Input type (position 5 of catalog number) = D (common bus with DC precharge) or E (common bus without DC precharge).
(7) See Appendix B for guidance on control pod selection.
(8) Common mode core is not required for the DC output of the PowerFlex 755TM regenerative bus supply.
(9) For PowerFlex 750-Series frame 1…7 drives, cores are required on inverter AC output only.
(10) For PowerFlex 755TM common bus inverters, there are no provisions for AC output common mode cores; however, an optional reflective wave filter is available. See catalog number position 11 - filtering and CM cap configuration, EMI solutions.
(11) The appropriate number of bus conditioner units will be added to the PowerFlex 755TM regenerative bus supply when adding a -P50 power option to the catalog number.
(12) See Ground Fault Indicator Filter on page 59 for recommendations.
(13) See Appendix B for guidance on control pod selection.

General Considerations

- Place all PE-B jumpers in the 'out' position when using a regenerative module. For instructions to disconnect the common mode capacitors, see PowerFlex 750-Series Products with TotalFORCE® Control Installation Instructions, publication 750-IN100 or PowerFlex 755TM IP00 Open Type Kits Installation Instructions, publication 750-IN101.

- When the Kinetix 5700 servo drives are used with a regenerative module, remove the factory installed ground screw/jumper. For removal instructions, see the Kinetix 5700 Servo Drives User Manual, publication 2198-UM002.

ATTENTION: Risk of equipment damage exists. Remove the screw/jumper when an active converter supplies the DC-bus voltage.

- All system components (bus supply and PowerFlex drives) must be selected for the same AC-line voltage.

- A low inductance type DC bus must be used. See DC Bus Connections on page 10 for details.

- If 6-pulse rectifiers are sharing the same AC input source as the PowerFlex 755T product, the following recommendation should be followed:
  - Apply an appropriately sized isolation transformer to the input side of the PowerFlex 755T product to help mitigate any unwanted harmonics that are commonly associated with 6-pulse loads.
  - If an isolation transformer cannot be used, the following recommendation should be considered:

    If all the 6-pulse rectifiers are equipped with 3% AC line reactors, the combined 6-pulse rectifier load cannot exceed 150% of the PowerFlex 755T product rating.

    If all the 6-pulse rectifiers are equipped with integral DC link chokes, the combined 6-pulse rectifier load cannot exceed 40% of the PowerFlex 755T rating.

- If the PowerFlex 755T product is connected to an AC source with an additional AFE product sharing that same AC Input Line source, the following recommendation should be considered:
  - It is recommended to put an appropriately sized isolation transformer in front of PowerFlex 755T product.

- If a disconnect switch is used between the common DC bus and the drive input, connect an auxiliary contact on the disconnect switch to a digital input of the drive. The corresponding digital input must be set to 'Precharge Enable'. This setting provides the proper precharge interlocking, which guards against possible damage to the drive when reconnecting the drive to an energized DC bus. Under this condition, the drives must have an internal or externally supplied precharge. Precharge handshaking is required before inverter operation.

Drive	Parameter		Digital Input
	Number	Setting	
PowerFlex 750-Series	189 [DI Precharge]	See PowerFlex 750-Series AC Drives Programming Manual, publication 750-PM001	
PowerFlex 755TM CBI	190 [DI Precharge]	See PowerFlex Drives with TotalFORCE Control Programming Manual, publication 750-PM100	
Kinetix 5700 inverter drives	See Kinetix 5700 Servo Drives User Manual, publication 2198-UM002		

When a Kinetix 5700 bus group is supplied by a PowerFlex 755TM regenerative bus supply, one of the Kinetix 5700 inverters in the bus group must be configured in the Logix Designer application as 'Shared DC - Non CIP Converter' and assigned to 'Regeneration OK'.

The running status of the line side converter of the PowerFlex 755TM regenerative bus supply must be linked to a digital output on an I/O option board and connected/interlocked with the 'Regeneration OK' input of the Kinetix 5700 drive. This connection doesn't signal that DC bus voltage is present but rather when the PowerFlex 755TM regenerative bus supply is ready to supply power, allowing the Kinetix 5700 inverters to be enabled and pull power from the bus. The PowerFlex 755TM running status could also be connected/interlocked to the 'Precharge Enable' of the PowerFlex 750-series drives and PowerFlex 755TM common bus inverters.

The following pictures depict the configuration of the 'Shared DC – non CIP Converter' bus configuration and 'Regeneration OK' digital input within the Logix Designer application. For more details, see the Kinetix 5700 Servo Drives User Manual, publication 2198-UM002.

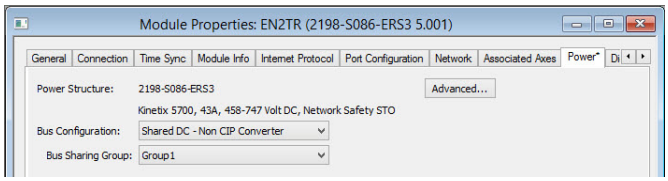

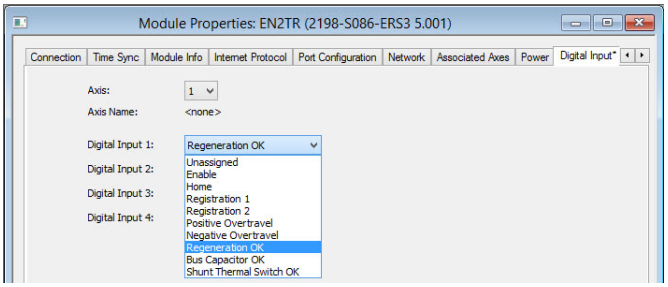

Sizing

Use the following guidelines to size the regenerative bus supply properly.

Basic Procedure to Size the Regenerative Bus Supply

See the drive documentation for sizing information.

1. Sum/total the DC input amp ratings of the respective drives, based on the normal / heavy duty rating (refer to tables in Appendix A). Assume that the drives are motoring 100% of rating.
2. Multiply the total from step 1 by a factor of 0.9.

   A 0.9 multiplier is used because the regenerative bus supply provides a voltage boost so the common bus inverter input current will be less. Power into the common bus inverter remains the same.
3. Find a PowerFlex 755TM 20J bus supply sized for continuous DC output current rating greater than or equal to the value from Step 2 (refer to tables in Appendix A).

Advanced Procedure to Size the Regenerative Bus Supply

1. Convert all motor powers to kW (kW = HP x 0.746).
2. Determine the total power and input current that is required during acceleration.(1)

   For Motoring Loads: $P_{Drive} = P_{Motor}$ / Motor Efficiency

   For Regenerating Loads: $P_{Drive} = P_{Motor}$ * Motor Efficiency

   $$P_{Accel} = P_{Drive1} + P_{Drive2} + \ldots$$

   Calculate the input current that is required on the regenerative unit during acceleration, taking advantage of the 110% for 1-minute overload rating of the regenerative unit.

   $$I_{Input} = P_{Accel} \times 1000 / (\sqrt{3} \times V_{LL} \times 1.1),$$

   where P_{Accel} is in kW, and V_{LL} = RMS line-to-line AC input voltage.
3. Determine the total power and input current that is required during steady-state run operation.(1)

   For Motoring Loads: $P_{Drive} = P_{Motor}$ / Motor Efficiency

   For Regenerating Loads: $P_{Drive} = P_{Motor}$ * Motor Efficiency

   $$P_{Run} = P_{Drive1} + P_{Drive2} + \ldots$$

   Calculate the steady-state input current that is required on the regenerative unit.

   $$I_{Input} = P_{Run} \times 1000 / (\sqrt{3} \times V_{LL}),$$

   where P_{Run} is in kW, and V_{LL} = RMS line-to-line AC input voltage.
4. Determine the total power and input current that is required during deceleration.(1)

   For Motoring Loads: $P_{Drive} = P_{Motor}$ / Motor Efficiency

   For Regenerating Loads: $P_{Drive} = P_{Motor}$ * Motor Efficiency

   $$P_{Decel} = P_{Drive1} + P_{Drive2} + \ldots$$

   Calculate the input current that is required on the regenerative unit during deceleration, taking advantage of the 110% for 1-minute overload rating of the regenerative unit.

   $$I_{Input} = P_{Decel} \times 1000 / (\sqrt{3} \times V_{LL} \times 1.1),$$

   where P_{Decel} is in kW, and V_{LL} = RMS line-to-line AC input voltage.
5. Compare the absolute values of the input current that is required for the regenerative unit during acceleration, deceleration, and steady state.
6. Select the regenerative unit with the input current rating that meets or exceeds the worst case input current.

(1) P_{Motor} is the motor power that is required for the application. The P_{Motor} could be positive if that section of the machine is motoring, or negative if that section of the machine is regenerating.

Capacitance Sizing

1. Sum the drive DC bus capacitance of the respective drives and the bus supply (refer to tables in Appendix A).
2. Divide the 'system' drive DC bus capacitance value by the 'system' DC input amp rating value.
3. Check for the following µF/A ratio:
   a. IF 400/480, THEN use 40 µF/A -10%
   b. IF 600/690, THEN use 28 µF/A -10%
4. If the µF/A ratio is greater than or equal to the calculated value from the previous step, go to Step 6. If the µF/A ratio is less than the calculated value from the previous step, go to Step 5.
5. IF 400/480VAC, additional capacitance = [40 µF * DC input amps] - drive DC bus capacitance

   OR

   IF 600/690VAC, additional capacitance = [28 µF * DC input amps] - drive DC bus capacitance
6. Sum the drive DC bus capacitance of the respective drives and, if applicable, the additional capacitance.
7. Check to make sure that the PowerFlex 755TM 20J regenerative bus supply's maximum external DC bus capacitance is greater than or equal to value in Step 6.
   a. IF OK, end.
   b. IF NOT OK, choose the next biggest regenerative bus supply size (rating) up and redo Steps 1…7.

Example One

The following is an example of capacitance sizing and uses these characteristics.

Table 2 - Machine Characteristics

Voltage Rating	480V AC
System Ground Type	Solid
Duty Rating	Normal duty

Table 3 - Drive and System Data

Drive #	Product Family	Cat. No.	Frame Size	DC Amps(1)	Internal DC Bus Capacitance (µF)(1)	Maximum External DC Bus Capacitance (µF)(1)	External Fusing Required(3)	Common Mode Core Required(3)
1	PowerFlex 755TM	20G1D3D302LNDNNNNN-C0-C12	8	333	9000	N/A	No	No
2	PowerFlex 755TM	20G1D3D430MNDNNNNN-C0-C11	8	475	9000	N/A	No	No
3	PowerFlex 755TM	20G1D3D545LNDNNNNN-C11	8	602	15000	N/A	No	No
4	PowerFlex 755TM	20G1D3D710MNANNNNN	8	784	15000	N/A	No	No
5	PowerFlex 755TM	20G1F3D960LNDNNNNN-C12	9	1060	18000	N/A	No	No
TOTALS				2928.6(2)	66000			
Bus supply	PowerFlex 755TM	20J...D3K4	12	3501	75000	500337	No	No

(1) This data obtained from Appendix A.
(2) Total DC Amps has the 0.9 multiplier factored in the sum.
(3) See Figure 9 on page 18 for guidance.

Table 4 - Additional Capacitance Calculations

Target System µF/A Ratio	400/480V AC = 40 µF/A - 10% = 36 µF/A or greater	=	(Drive Internal DC Bus Capacitance + Regenerative Bus Supply Internal DC Bus Capacitance) / (Drive DC Input Amps)
Calculated System µF/A Ratio	48.1 µF/A	=	(66000 µF + 75000 µF) / 2928.6 A
Additional Capacitance Required	0		

Table 5 - Sample Bill of Material

Cat. No.	Qty.	Description
20G1D3D302LNDNNNNN-C0-C12-P46	1	PowerFlex 755T Drives, Air Cooled, Common Bus Inverter with DC Precharge (PowerFlex 755TM), Type 1/IP21, Floor Mount, LD - 300HP (361A), ND - 250HP (302A), HD - 200HP (248A), 480 VAC, 3 PH, Frame 8, Standard EMI Protection, Door Mounted HIM (20-750-C6S) & TotalFORCE Control
20G1D3D430MNDNNNNN-C0-C11-P46	1	PowerFlex 755T Drives, Air Cooled, Common Bus Inverter with DC Precharge (PowerFlex 755TM), Type 1/IP21, Floor Mount, LD - 400HP (485A), ND - 350HP (430A), HD - 300HP (361A), 480 VAC, 3 PH, Frame 8, Standard EMI Protection & Reflected Wave (dV/dT) Filtering, Door Mounted HIM (20-750-C6S) & TotalFORCE Control
20G1D3D545LNANNNNN-P46	1	PowerFlex 755T Drives, Air Cooled, Common Bus Inverter with DC Precharge (PowerFlex 755TM), Type 1/IP21, Floor Mount, LD - 500HP (617A), ND - 450HP (545A), HD - 350HP (454A), 480 VAC, 3 PH, Frame 8, Standard EMI Protection, No HIM & TotalFORCE Control
20G1D3D710MNANNNNN-P46	1	PowerFlex 755T Drives, Air Cooled, Common Bus Inverter with DC Precharge (PowerFlex 755TM), Type 1/IP21, Floor Mount, LD - 650HP (765A), ND - 600HP (710A), HD - 450HP (545A), 480 VAC, 3 PH, Frame 8, Standard EMI Protection & Reflected Wave (dV/dT) Filtering, No HIM & TotalFORCE Control
20G1D3D960LNDNNNNN-C12-P46	1	PowerFlex 755T Drives, Air Cooled, Common Bus Inverter with DC Precharge (PowerFlex 755TM), Type 1/IP21, Floor Mount, LD - 900HP (1045A), ND - 800HP (960A), HD - 700HP (800A), 480 VAC, 3 PH, Frame 9, Standard EMI Protection, Door Mounted HIM (20-750-C6S) & TotalFORCE Control
20J1F3D3K4LNDNNNNN	1	PowerFlex 755T Bus Supplies, Air Cooled, Regenerative & Low Harmonic Bus Supply (PowerFlex 755TM), Type 1/IP21, Floor Mount, LD - 2632HP (3784A), ND - 2436HP (3501A), HD - 2132HP (3065A), 480 VAC, 3 PH, Frame 12, Standard EMI Protection, Door Mounted HIM (20-750-C6S) & TotalFORCE Control

Example Two

The following is another example of capacitance sizing and uses these characteristics.

Table 6 - Machine Characteristics

Voltage Rating	600V AC
System Ground Type	Ungrounded
Duty Rating	Normal duty

Table 7 - Drive and System Data

Drive #	Product Family	Cat. No.	Frame Size	DC Amps(1)	Internal DC Bus Capacitance (µF)(1)	Maximum External DC Bus Capacitance (µF)(1)	External Fusing Required(3)	Common Mode Core Required(3)
1	PowerFlex 755TM	20G1D3E1K1LNANNNNN	10	1154	23250	N/A	No	No
2	PowerFlex 755TM	20G1D3E242MNANNNNN	8	267	4650	N/A	No	No
3	PowerFlex 755	20G11NE9P0AA0NNNNN	3	9.9	1200	N/A	Yes	Yes
4	PowerFlex 755	20G14NE012AN0NNNNN	6	13.1	5850	N/A	Yes	Yes
5	PowerFlex 755	20G11NE022AA0NNNNN	3	24.1	1200	N/A	Yes	Yes
6	PowerFlex 755	20G11NE027AA0NNNNN	4	29.6	1800	N/A	Yes	Yes
7	PowerFlex 755	20G14NE042AA0NNNNN	6	46	5,850	N/A	Yes	Yes
8	PowerFlex 755	20G14NE052AA0NNNNN	5	56.9	3,600	N/A	Yes	Yes
TOTALS				1440.54(2)	47400			
Bus supply	PowerFlex 755TM	20J…E1K5	10	1471	23250	146512	No	No

(1) This data obtained from Appendix A.
(2) Total DC Amps has the 0.9 multiplier factored in the sum.
(3) See Figure 11 on page 20 for guidance.

Table 8 - Additional Capacitance Calculation

Target System µF/A Ratio	600/690V AC = 28 µF/A - 10% = 25.2 µF/A or greater	=	(Drive Internal DC Bus Capacitance + Regenerative Bus Supply Internal DC Bus Capacitance) / (Drive DC Input Amps)
Calculated System µF/A Ratio	49.0 µF/A	=	(47400 µF + 23250 µF) / 1440.54 A
Additional Capacitance Required	No		

A sample bill of material is shown on the following page.

Table 9 - Sample Bill of Material

Cat. No.	Qty.	Description
PN-50085 or ER-101011	1	Ground Fault Indicator Filter
Zig-zag transformer	1	Contact Rockwell Automation or a transformer manufacture for recommendations.
20J1F3E1K5LNDNNNNN-P50	1	PowerFlex 755T Bus Supplies, Air Cooled, Regenerative & Low Harmonic Bus Supply (PowerFlex 755TM), Type 1/IP21, Floor Mount, LD - 1452HP (1670A), ND - 1279HP (1471A), HD - 1091HP (1255A), 600 VAC, 3PH, Frame 10, Standard EMI Protection, Door Mounted HIM (20-750-C6S) & TotalFORCE Control
20G1D3E1K1LNDNNNNN-C12	1	PowerFlex 755T Drives, Air Cooled, Common Bus Inverter with DC Precharge (PowerFlex 755TM), Type 1/IP21, Floor Mount, LD - 1250HP (1220A), ND - 1100HP (1045A), HD - 1000HP (980A), 600 VAC, 3PH, Frame 10, Standard EMI Protection, Door Mounted HIM (20-750-C6S) & TotalFORCE Control
20G1D3E242MNANNNNN	1	PowerFlex 755T Drives, Air Cooled, Common Bus Inverter with DC Precharge (PowerFlex 755TM), Type 1/IP21, Floor Mount, LD - 300HP (295A), ND - 250HP (242A), HD - 200HP (192A), 600 VAC, 3PH, Frame 8, Standard EMI Protection & Reflected Wave (dV/dT) Filtering, No HIM & TotalFORCE Control
20G11NE9P0AA0NNNNN	1	PowerFlex 755 AC Drive, with Embedded EtherNet/IP, Air Cooled, AC Input with DC Terminals, Open Type, 9 A, 7.5 HP ND, 5 HP HD, 600V AC, 3 PH, Frame 3, Filtered, CM Jumper Removed, DB Transistor, Blank (No HIM)
HSJ15	2	600VAC 15 A Class J HS Fuse
1321-M048	1	Common Mode Choke, 45 A, Open Style
20G14NE012AN0NNNNN	1	PowerFlex 755 AC Drive, with Embedded EtherNet/IP, Air Cooled, DC Input with Precharge, Open Type, 12 A, 10 HP ND, 7.5 HP HD, 600V AC, 3 PH, Frame 6, Filtered, CM Jumper Removed, None, Blank (No HIM)
HSJ20	2	600VAC 20 A Class J HS Fuse
1321-M180	1	Common Mode Choke, 180 A, Open Style
20G11NE022AA0NNNNN	1	PowerFlex 755 AC Drive, with Embedded EtherNet/IP, Air Cooled, AC Input with DC Terminals, Open Type, 22 A, 20 HP ND, 15 HP HD, 600V AC, 3 PH, Frame 3, Filtered, CM Jumper Removed, DB Transistor, Blank (No HIM)
HSJ40	2	600VAC 40 A Class J HS Fuse
1321-M048	1	Common Mode Choke, 45 A, Open Style
20G11NE027AA0NNNNN	1	PowerFlex 755 AC Drive, with Embedded EtherNet/IP, Air Cooled, AC Input with DC Terminals, Open Type, 27 A, 25 HP ND, 20 HP HD, 600V AC, 3 PH, Frame 4, Filtered, CM Jumper Removed, DB Transistor, Blank (No HIM)
HSJ50	2	600VAC 50 A Class J HS Fuse
1321-M180	1	Common Mode Choke, 180 A, Open Style
20G14NE042AA0NNNNN	1	PowerFlex 755 AC Drive, with Embedded EtherNet/IP, Air Cooled, DC Input with Precharge, Open Type, 42 A, 40 HP ND, 30 HP HD, 600V AC, 3 PH, Frame 6, Filtered, CM Jumper Removed, DB Transistor, Blank (No HIM)
HSJ70	2	600VAC 70 A Class J HS Fuse
1321-M180	1	Common Mode Choke, 180 A, Open Style
20G14NE052AA0NNNNN	1	PowerFlex 755 AC Drive, with Embedded EtherNet/IP, Air Cooled, DC Input with Precharge, Open Type, 52 A, 50 HP ND, 40 HP HD, 600V AC, 3 PH, Frame 5, Filtered, CM Jumper Removed, DB Transistor, Blank (No HIM)
HSJ90	2	600VAC 90 A Class J HS Fuse
1321-M180	1	Common Mode Choke, 180 A, Open Style

Example Three

The following is another example of capacitance sizing and uses these characteristics.

Table 10 - Machine Characteristics

Voltage Rating	480V AC
System Ground Type	High resistive ground
Duty Rating	Normal duty

Table 11 - Additional Capacitance Calculation

Drive #	Product Family	Cat. No.	Frame Size	DC Amps(1)	Internal DC Bus Capacitance (µF)(1)	Maximum External DC Bus Capacitance (µF)(1)	External Fusing Required(3)	Common Mode Core Required(3)
1	PowerFlex 755TM	20G1D3D545LNANNNNN	8	602	15000	N/A	No	No
2	PowerFlex 755TM	20G1D3D710MNANNNNN	8	784	15000	N/A	No	No
3	PowerFlex 755	20G11RD8P0AA0NNNNN	1	8.1	410	N/A	Yes	Yes
4	PowerFlex 755	20G11ND022AA0NNNNN	2	23.3	1000	N/A	Yes	Yes
5	PowerFlex 755	20G11ND034AA0NNNNN	3	36.4	1500	N/A	Yes	Yes
6	PowerFlex 755	20G11ND052AA0NNNNN	4	55.7	2400	N/A	Yes	Yes
7	PowerFlex 755	20G14ND077AA0NNNNN	5	84.5	3600	N/A	Yes	Yes
8	PowerFlex 755	20G14ND186AA0NNNNN	6	204.1	9200	N/A	Yes	Yes
9	PowerFlex 755	20G14ND302AA0NNNNN	7	331.3	13800	N/A	Yes	Yes
10	Kinetix 5700	2198-S130-ERS3	85 mm	69	840	N/A	Yes(4)	No
11	Kinetix 5700	2198-S086-ERS3	55 mm	45.7	560	N/A	Yes(4)	No
12	Kinetix 5700	2198-D032-ERS3	55 mm	13.7	390	N/A	Yes(4)	No
	Kinetix 5700	2198-CAPMOD-2240	N/A	N/A	2240	N/A	N/A	N/A
TOTALS				2032.02(2)	65940	N/A		
Bus supply	PowerFlex 755TM	20J…D2K0	10	2131	45000	304300	No	No

(1) This data obtained from Appendix A.
(2) Total DC Amps has the 0.9 multiplier factored in the sum.
(3) See Figure 10 on page 19 for guidance.
(4) Fuse the Kinetix 5700 drive cluster. See Kinetix 5700 Servo Drives on page 31 for more information about fusing.

Table 12 - Additional Capacitance Calculation

Target System µF/A Ratio	400/480V AC = 40 µF/A - 10% = 36 µF/A or greater	=	(Drive Internal DC Bus Capacitance + Regenerative Bus Supply Internal DC Bus Capacitance) / (Drive DC Input Amps)
Calculated System µF/A Ratio	54.6 µF/A	=	(65940 µF + 45000µF) / 2032.02 A
Additional Capacitance Required	No		

A sample bill of material is shown on the following page.

Table 13 - Sample Bill of Material

Cat. No.	Qty.	Description
PN-50085 or ER-101011	1	ground fault indicator filter
20J1F3D2K0LNDNNNNN-P50	1	PowerFlex 755T Bus Supplies, Air Cooled, Regenerative & Low Harmonic Bus Supply (PowerFlex 755TM), Type 1/IP21, Floor Mount, LD - 1603HP (2304A), ND - 1483HP (2131A), HD - 1184HP (1702A), 480 VAC, 3 PH, Frame 10, Standard EMI Protection, Door Mounted HIM (20-750-C6S) & TotalFORCE Control
20G1D3D545LNDNNNNN-C12	1	PowerFlex 755T Drives, Air Cooled, Common Bus Inverter with DC Precharge (PowerFlex 755TM), Type 1/IP21, Floor Mount, LD - 500HP (617A), ND - 450HP (545A), HD - 350HP (454A), 480 VAC, 3 PH, Frame 8, Standard EMI Protection, Door Mounted HIM (20-750-C6S) & TotalFORCE Control
20G1D3D710MNANNNNN	1	PowerFlex 755T Drives, Air Cooled, Common Bus Inverter with DC Precharge (PowerFlex 755TM), Type 1/IP21, Floor Mount, LD - 650HP (765A), ND - 600HP (710A), HD - 450HP (545A), 480 VAC, 3 PH, Frame 8, Standard EMI Protection & Reflected Wave (dV/dT) Filtering, No HIM & TotalFORCE Control
20G11RD8P0AA0NNNNN	1	PowerFlex 755 AC Drive, with Embedded Ethernet/IP, Air Cooled, AC Input with DC Terminals, Open Type/Frame 1, 8 Amps, (Fr1 5HP ND, 3HP HD/Fr2 5HP ND, 5HP HD), 480 VAC, 3 PH, Frame 1, Filtered, CM Jumper Removed, DB Transistor, Blank (No HIM)
HSJ15	2	600VAC 15A Class J HS Fuse
1321-M048	1	Common Mode Choke, 45 Amps, Open Style
20G11ND022AA0NNNNN	1	PowerFlex 755 AC Drive, with Embedded Ethernet/IP, Air Cooled, AC Input with DC Terminals, Open Type, 22 Amps, 15HP ND, 10HP HD, 480 VAC, 3 PH, Frame 2, Filtered, CM Jumper Removed, DB Transistor, Blank (No HIM)
HSJ40	2	600VAC 40A Class J HS Fuse
1321-M048	1	Common Mode Choke, 45 Amps, Open Style
20G11ND034AA0NNNNN	1	PowerFlex 755 AC Drive, with Embedded Ethernet/IP, Air Cooled, AC Input with DC Terminals, Open Type, 34 Amps, 25HP ND, 20HP HD, 480 VAC, 3 PH, Frame 3, Filtered, CM Jumper Removed, DB Transistor, Blank (No HIM)
HSJ60	2	600VAC 60A Class J HS Fuse
1321-M048	1	Common Mode Choke, 45 Amps, Open Style
20G11ND052AA0NNNNN	1	PowerFlex 755 AC Drive, with Embedded Ethernet/IP, Air Cooled, AC Input with DC Terminals, Open Type, 52 Amps, 40HP ND, 30HP HD, 480 VAC, 3 PH, Frame 4, Filtered, CM Jumper Removed, DB Transistor, Blank (No HIM)
HSJ90	2	600VAC 90A Class J HS Fuse
1321-M180	1	Common Mode Choke, 180 Amps, Open Style
20G14ND077AA0NNNNN	1	PowerFlex 755 AC Drive, with Embedded Ethernet/IP, Air Cooled, DC Input with Precharge, Open Type, 77 Amps, 60HP ND, 50HP HD, 480 VAC, 3 PH, Frame 5, Filtered, CM Jumper Removed, DB Transistor, Blank (No HIM)
HSJ150	2	600VAC 150A Class J HS Fuse
1321-M180	1	Common Mode Choke, 180 Amps, Open Style
20G14ND186AA0NNNNN	1	PowerFlex 755 AC Drive, with Embedded Ethernet/IP, Air Cooled, DC Input with Precharge, Open Type, 186 Amps, 150HP ND, 125HP HD, 480 VAC, 3 PH, Frame 6, Filtered, CM Jumper Removed, DB Transistor, Blank (No HIM)
HSJ400	2	600VAC 400A Class J HS Fuse
1321-M180	1	Common Mode Choke, 180 Amps, Open Style
20G14ND302AA0NNNNN	1	PowerFlex 755 AC Drive, with Embedded Ethernet/IP, Air Cooled, DC Input with Precharge, Open Type, 302 Amps, 250HP ND, 200HP HD, 480 VAC, 3 PH, Frame 7, Filtered, CM Jumper Removed, DB Transistor, Blank (No HIM)
Bussman 170M6608	2	Bussmann / Eaton - Specialty Fuses 500A 690V 3FU/90 AR UC
SK-Y1-CMCORE1[(1)]	1	Rockwell Automation - Engineered to order (ETO) - Common Mode Core
HSJ300	2	600VAC 300A Class J HS Fuse
2198-CAPMOD-2240	1	Kinetix 5700 Capacitor Module
2198-CAPMOD-DCBUS-IO	1	Kinetix 5700 Capacitor Extension Module
2198-S130-ERS3	1	65A Single-axis Module 85mm
2198-S086-ERS3	1	43A Single-axis Module 85mm
2198-D032-ERS3	1	2x13A Dual-axis Module 55mm

(1) The previous part number was 30201-031-01.

Fuse Considerations

This section provides fusing information for devices that are used in regenerative bus supply configurations.

Kinetix 5700 Servo Drives

The Kinetix 5700 is a common-bus servo drive system. Inverters are connected in drive clusters and have a DC bus link that connects all modules in the drive cluster. For each drive cluster supplied by a common bus, there must be a capacitor module and/or extension module.

For 200 A DC input systems, a capacitor module and an extension module are required to connect to the drive cluster, and the DC+ and DC- inputs must be fused with a Mersen HSJ300 fuse.

Figure 12 - Kinetix 5700 Servo Drive System (200 A DC Input) with PowerFlex 755TM Regenerative Bus Supply (shown for illustrative purposes only)

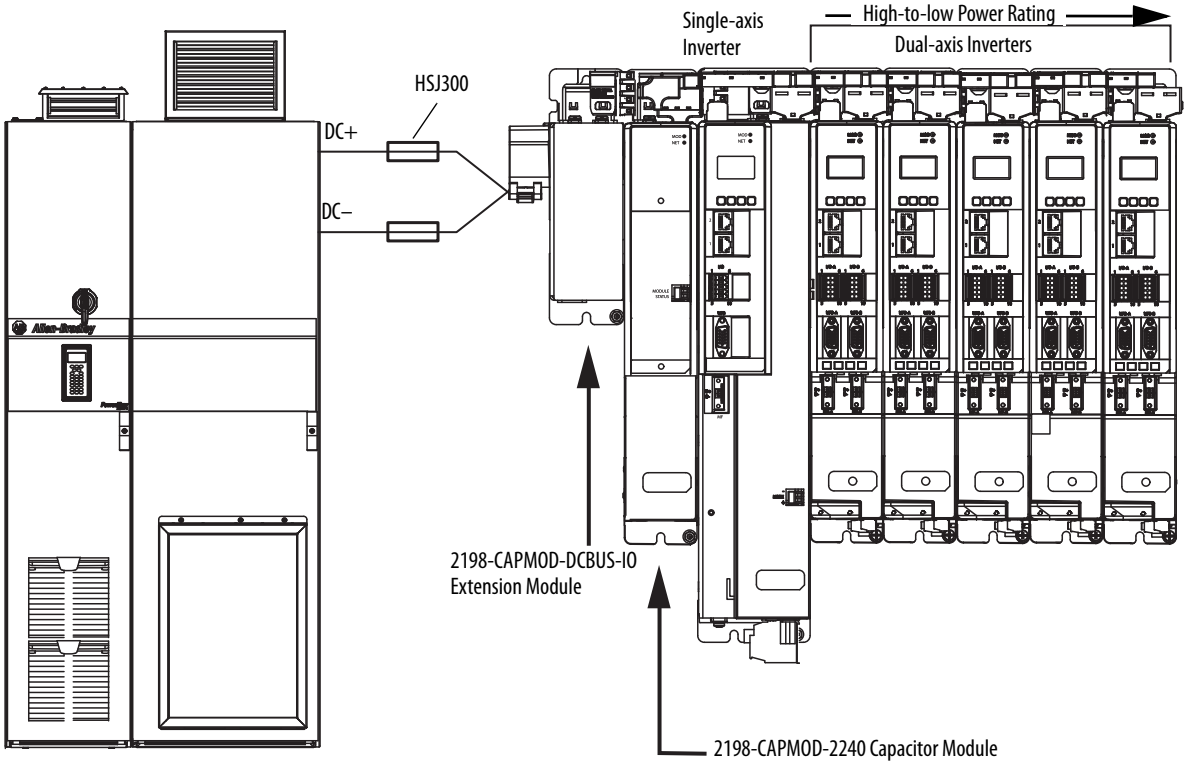

For a 100 A DC input system, a single capacitor module is required to connect to the drive cluster, and the DC+ and DC- inputs must be fused with a Mersen HSJ200 fuse.

Figure 13 - Kinetix 5700 Servo Drive System (100 A DC Input) with PowerFlex 755TM Regenerative Bus Supply (shown for illustrative purposes only)

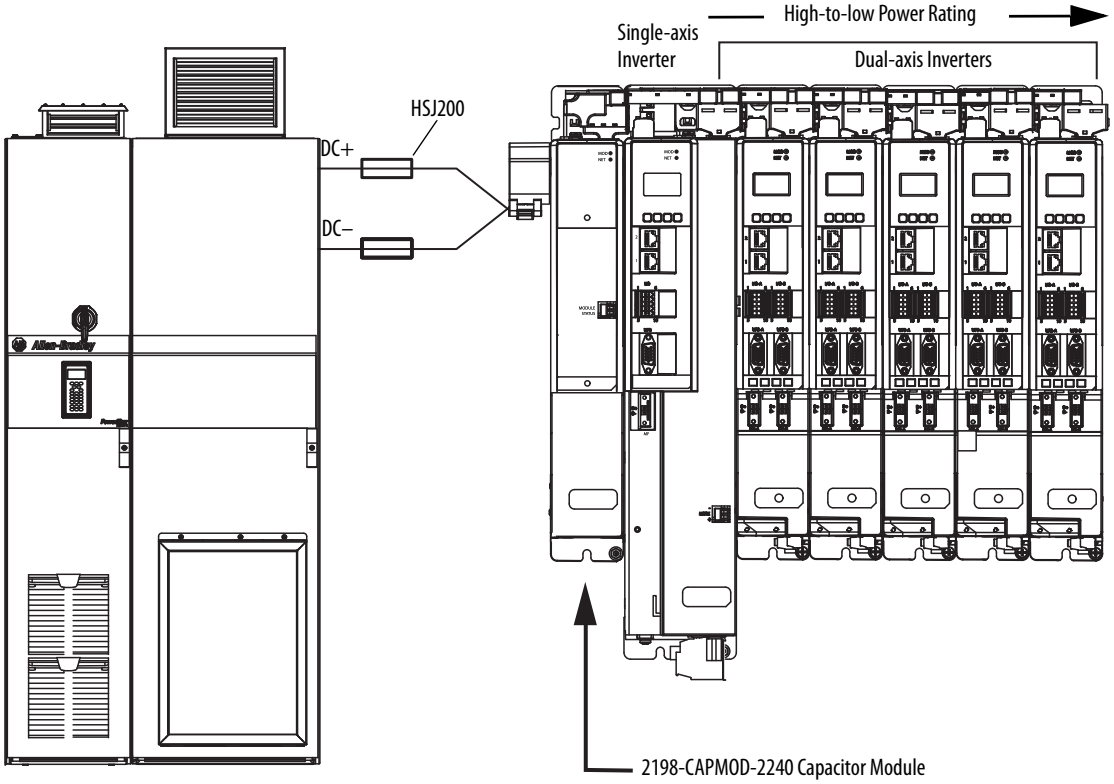

PowerFlex Drive Ratings, Recommended DC Bus Fuses, and Drive DC Bus Capacitance

The tables in this appendix provide drive ratings (including DC input currents), recommended DC input fuses (manufacturer catalog number), and internal drive DC bus capacitance.

540 Volt DC Input Fuses

Table 14 - PowerFlex® 750-Series Drives — Frames 1…7, 540V DC Input Fuses

Cat. No. 20F…/ 20G…[1]	Frame Size	kW Rating		DC Input Rating		Drive DC Bus Capacitance (µF)	Non-time Delay Fuse			
							Qty.		Amps	Fuse Cat. No.
		ND	HD	Amps	kW		DC+	DC–		
C2P1	1	0.75	—	2.1	1.1	110	1	1	6	Bussman JKS-6 [2]
		—	0.37	1.3	0.7				4	Bussman JKS-4 [2]
C2P1	2	0.75	—	2.1	1.1	705	1	1	6	Bussman JKS-6 [2]
		—	0.75	2.1	1.1				6	Bussman JKS-6 [2]
C3P5	1	1.5	—	3.7	2.0	165	1	1	8	Bussman JKS-8 [2]
		—	0.75	2.1	1.1				6	Bussman JKS-6 [2]
C3P5	2	1.5	—	3.7	2.0	705	1	1	8	Bussman JKS-8 [2]
		—	1.5	3.7	2.0				8	Bussman JKS-8 [2]
C5P0	1	2.2	—	5.3	2.9	280	1	1	10	Bussman JKS-10 [2]
		—	1.5	3.7	2.0				8	Bussman JKS-8 [2]
C5P0	2	2.2	—	5.3	2.9	705	1	1	10	Bussman JKS-10 [2]
		—	2.2	5.3	2.9				10	Bussman JKS-10 [2]
C8P7	1	4	—	9.3	5.0	470	1	1	15	Mersen HSJ15 [3]
		—	2.2	5.3	2.9				10	Mersen HSJ10 [3]
C8P7	2	4	—	9.3	5.0	705	1	1	15	Mersen HSJ15 [3]
		—	4	9.3	5.0				15	Mersen HSJ15 [3]
C011	1	5.5	—	12.6	6.8	560	1	1	20	Mersen HSJ20 [3]
		—	4	9.3	5.0				15	Mersen HSJ15 [3]
C011	2	5.5	—	12.6	6.8	705	1	1	20	Mersen HSJ20 [3]
		—	5.5	12.6	6.8				20	Mersen HSJ20 [3]
C015	1	7.5	—	17.0	9.2	680	1	1	25	Mersen HSJ25 [3]
		—	5.5	12.6	6.8				20	Mersen HSJ20 [3]
C015	2	7.5	—	17.0	9.2	705	1	1	25	Mersen HSJ25 [3]
		—	5.5	12.6	6.8				20	Mersen HSJ20 [3]
C022	2	11	—	24.6	13.3	1020	1	1	40	Mersen HSJ40 [3]
		—	7.5	17.0	9.2				25	Mersen HSJ25 [3]

Table 14 - PowerFlex® 750-Series Drives — Frames 1…7, 540V DC Input Fuses (continued)

Cat. No. 20F…/ 20G…(1)	Frame Size	kW Rating		DC Input Rating		Drive DC Bus Capacitance (µF)	Non-time Delay Fuse			
							Qty.		Amps	Fuse Cat. No.
		ND	HD	Amps	kW		DC+	DC–		
C030	3	15	—	33.6	18.1	1200	1	1	50	Mersen HSJ50 (3)
		—	11	24.6	13.3				40	Mersen HSJ40 (3)
C037	3	18.5	—	41.4	22.3	1500	1	1	70	Mersen HSJ70 (3)
		—	15	33.6	18.1				50	Mersen HSJ50 (3)
C043	3	22	—	48.1	26.0	1800	1	1	90	Mersen HSJ90 (3)
		—	18.5	41.4	22.3				70	Mersen HSJ70 (3)
C060	4	30	—	67.1	36.2	2400	1	1	100	Mersen HSJ100 (3)
		—	22	48.1	26.0				90	Mersen HSJ90 (3)
C072	4	37	—	82.4	44.5	3000	1	1	125	Mersen HSJ125 (3)
		—	30	67.1	36.2				100	Mersen HSJ100 (3)
C072	5	37	—	82.4	44.5	3600	1	1	125	Mersen HSJ125 (3)
		—	30	67.1	36.2				100	Mersen HSJ100 (3)
C085	5	45	—	97.3	52.5	3600	1	1	150	Mersen HSJ150 (3)
		—	37	82.4	44.5				125	Mersen HSJ125 (3)
C104	5	55	—	120.2	64.9	4500	1	1	175	Mersen HSJ175 (3)
		—	45	97.3	52.5				150	Mersen HSJ150 (3)
C104	6	55	—	120.2	64.9	4600	1	1	175	Mersen HSJ175 (3)
		—	45	97.3	52.5				150	Mersen HSJ150 (3)
C140	6	75	—	160.3	86.5	4600	1	1	250	Mersen HSJ250 (3)
		—	55	120.2	64.9				175	Mersen HSJ175 (3)
C170	6	90	—	194.6	105.1	9200	1	1	350	Mersen HSJ350 (3)
		—	75	160.3	86.5				250	Mersen HSJ250 (3)
C205	6	110	—	234.7	126.7	9200	1	1	350	Mersen HSJ350 (3)
		—	90	194.6	105.1				350	Mersen HSJ350 (3)
C260	6	132	—	297.7	160.7	9200	1	1	450	Mersen HSJ450 (3)
		—	110	234.7	126.7				350	Mersen HSJ350 (3)
C260	7	132	—	297.7	160.8	13800	1	1	400	Mersen HSJ450 (3)
		—	110	234.7	126.7				350	Mersen HSJ350 (3)
C302	7	160	—	345.7	186.7	13800	1	1	500	Bussman 170M6608 (2)
		—	132	297.7	160.7				450	Mersen HSJ450 (3)
C367	7	200	—	420.2	226.9	13800	1	1	800	Bussman 170M6612 (2)
		—	160	345.7	186.7				500	Bussman 170M6608 (2)
C456	7	250	—	522.0	281.9	18400	1	1	900	Bussman 170M6613 (2)
		—	200	420.2	226.9				800	Bussman 170M6612 (2)
C477	7	270		546	294.8	18400	1	1	900	Bussman 170M6613 (2)
			200	420.2	226.9				800	Bussman 170M6612 (2)

(1) Drive input type (position 5 of catalog number) = 1 (AC input with precharge, includes DC terminals) or 4 (DC input with precharge).

(2) See Fuse Certification and Test Data on page 50 for fuse self-certification and test data for Bussmann 170M and JKS fuses that are recommended for the DC bus fusing.

(3) A test program was developed to confirm that the HSJ (High Speed J) fuses meet or exceed the requirements set forth by Rockwell Automation for the fuses on the common DC bus for all Allen-Bradley architecture, component, and legacy drives. The criteria for acceptance was:
- 600V AC rectified, 810V DC average, fuses located at (+) and (-) leg. Short circuit test at 65 kA.
- Time constant minimum 3 milliseconds (maximum 15 milliseconds).
- No over-load protection required.
- Let thru must be less than rating of the conductors.

This testing is listed in UL file E2137 Vol2 Sec 31 page 1 and in CSA report 1662646.

Table 15 - PowerFlex 755TM Common Bus Inverters – Frames 8…12, 540V DC (400V AC)

Cat. No. 20G…[1]	Frame Size	kW Rating (AC Output)		DC Input Rating		Drive DC Bus Capacitance (µF)	Non-time Delay Fuse - DC Input[2]		
		Continuous		Continuous			Amps	Fuse Cat. No.	Qty.[3]
		ND	HD	Amps	kW				
C302	8	160	—	348	187.9	9000	1400	SK-RM-DCFUSE1-F8	1
		—	132	300	162.0				
C367	8	200	—	423	228.4	9000	1400	SK-RM-DCFUSE1-F8	1
		—	160	348	187.9				
C460	8	250	—	530	286.2	9000	1400	SK-RM-DCFUSE1-F8	1
		—	200	423	228.4				
C540	8	315	—	622	335.9	9000	1400	SK-RM-DCFUSE1-F8	1
		—	250	530	286.2				
C585	8	315	—	674	364.0	15000	1400	SK-RM-DCFUSE1-F8	1
		—	250	530	286.2				
C650	8	355	—	749	404.5	15000	1400	SK-RM-DCFUSE1-F8	1
		—	315	622	335.9				
C750	8	400	—	864	466.6	15000	1400	SK-RM-DCFUSE1-F8	1
		—	315	674	364.0				
C770	8	400	—	887	479.0	15000	1400	SK-RM-DCFUSE1-F8	1
		—	355	740	399.6				
C920	9	500	—	1060	572.4	18000	1400	SK-RM-DCFUSE1-F8	2
		—	400	887	479.0				
C1K0	9	560	—	1198	646.9	18000	1400	SK-RM-DCFUSE1-F8	2
		—	500	1060	572.4				
C1K1	9	630	—	1281	691.7	30000	1400	SK-RM-DCFUSE1-F8	2
		—	500	1198	646.9				
C1K2	9	710	—	1354	731.2	30000	1400	SK-RM-DCFUSE1-F8	2
		—	560	1256	678.2				
C1K4	9	800	—	1685	909.9	30000	1400	SK-RM-DCFUSE1-F8	2
		—	630	1354	731.2				
C1K6	10	850	—	1821	983.3	45000	1400	SK-RM-DCFUSE1-F8	3
		—	710	1688	911.5				
C1K7	10	1000	—	1976	1067.0	45000	1400	SK-RM-DCFUSE1-F8	3
		—	800	1705	920.7				
C2K1	10	1250	—	2484	1341.4	45000	1400	SK-RM-DCFUSE1-F8	3
		—	1000	1976	1067.0				
C2K8	11	1650	—	3282	1772.3	60000	1400	SK-RM-DCFUSE1-F8	4
		—	1400	2684	1449.4				
C3K5	12	2000	—	4081	2203.7	75000	1400	SK-RM-DCFUSE1-F8	5
		—	1650	3493	1886.2				

(1) Drive input type (position 5 of catalog number) = D (common bus with DC precharge) or E (common bus without DC precharge).
(2) These drives have factory-installed fusing.
(3) One kit per power module.

Table 16 - Kinetix 5700 Modules (400V AC) (1)(2)

Module Cat. No.	Frame Width (mm)	kW Rating (AC Output)	DC Input Rating		Module DC Bus Capacitance (µF)
		Continuous	Continuous		
		ND	Amps	kW	
2198-D006-ERSx	55	1	2.6	1.5	165
2198-D012-ERSx	55	2	5.2	2.9	165
2198-D020-ERSx	55	3	8.5	4.7	330
2198-D032-ERSx	55	5	13.7	7.6	390
2198-D057-ERSx	85	7.5	24.4	13.5	705
2198-S086-ERSx	85	50	45.6	25.3	560
2198-S130-ERSx	85	75	69	38.2	840
2198-S160-ERSx	100	200	92.4	51.2	1120
2198-CAPMOD-2240	55	75	100	N/A	2240
2198-CAPMOD-DCBUS-IO	55	200	200(3)	N/A	N/A

(1) For the Kinetix® 5700 single- and dual-axis servo drives, fuse is internal to product and is not field replaceable.

(2) Only one set of DC+/DC- fuse is required for each cluster of common bus drives. The fuse sizes are chosen based on the DC current rating of the drive cluster. See Kinetix 5700 Servo Drives on page 31 for more information on cluster fusing recommendations.

(3) When used with the capacitor module (2198-CAPMOD-2240), the appropriate bus bars, and following the installation instructions in the Kinetix 5700 Capacitor Modules Installation Instructions, publication 2198-IN008.

Table 17 - PowerFlex 755TM Bus Supplies — Frames 8…12, 400V AC (580V DC)

Cat. No. 20J…[1]	Frame Size	DC Output Rating			Drive DC Bus Capacitance (µF)	Maximum External DC Bus Capacitance (µF)	Non-time Delay Fuse - AC Input[2]			Non-time Delay Fuse - DC Output[2]		
		kW Rating		Continuous			Amps	Fuse Cat. No.	Qty.[3]	Amps	Fuse Cat. No.	Qty.[3]
		ND	HD	Amps								
C302	8	188	—	324	9000	45839	900	SK-RM-ACFUSE1-F8	1	1400	SK-RM-DCFUSE1-F8	1
		—	162	279								
C367	8	228	—	394	9000	55822	900	SK-RM-ACFUSE1-F8	1	1400	SK-RM-DCFUSE1-F8	1
		—	188	324								
C460	8	286	—	494	9000	70104	900	SK-RM-ACFUSE1-F8	1	1400	SK-RM-DCFUSE1-F8	1
		—	228	394								
C540	8	336	—	579	9000	82390	900	SK-RM-ACFUSE1-F8	1	1400	SK-RM-DCFUSE1-F8	1
		—	286	494								
C585	8	364	—	628	15000	89301	1250	SK-RM-ACFUSE2-F8	1	1400	SK-RM-DCFUSE1-F8	1
		—	286	494								
C650	8	405	—	698	15000	99283	1250	SK-RM-ACFUSE2-F8	1	1400	SK-RM-DCFUSE1-F8	1
		—	336	579								
C750	8	467	—	805	15000	114641	1250	SK-RM-ACFUSE2-F8	1	1400	SK-RM-DCFUSE1-F8	1
		—	364	628								
C770	8	479	—	826	15000	117712	1250	SK-RM-ACFUSE2-F8	1	1400	SK-RM-DCFUSE1-F8	1
		—	405	698								
C920	9	572	—	987	18000	140749	1800	SK-RM-ACFUSE3-F9	1	1400	SK-RM-DCFUSE1-F8	2
		—	479	826								
C1K0	9	647	—	1116	18000	159177	1800	SK-RM-ACFUSE3-F9	1	1400	SK-RM-DCFUSE1-F8	2
		—	572	987								
C1K1	9	692	—	1193	30000	170158	2000	SK-RM-ACFUSE4-F9	1	1400	SK-RM-DCFUSE1-F8	2
		—	647	1116								
C1K2	9	731	—	1261	30000	179910	2000	SK-RM-ACFUSE4-F9	1	1400	SK-RM-DCFUSE1-F8	2
		—	678	1170								
C1K4	9	910	—	1570	30000	224139	2000	SK-RM-ACFUSE4-F9	1	1400	SK-RM-DCFUSE1-F8	2
		—	731	1261								
C1K6	10	984	—	1697	45000	242261	2000	SK-RM-ACFUSE4-F9	1	1400	SK-RM-DCFUSE1-F8	3
		—	911	1572			1250	SK-RM-ACFUSE2-F8	1			
C1K7	10	1067	—	1840	45000	262840	2000	SK-RM-ACFUSE4-F9	1	1400	SK-RM-DCFUSE1-F8	3
		—	921	1588			1250	SK-RM-ACFUSE2-F8	1			
C2K1	10	1342	—	2314	45000	330567	2000	SK-RM-ACFUSE4-F9	1	1400	SK-RM-DCFUSE1-F8	3
		—	1067	1840			1250	SK-RM-ACFUSE2-F8	1			
C2K8	11	1772	—	3057	60000	436994	2000	SK-RM-ACFUSE4-F9	2	1400	SK-RM-DCFUSE1-F8	4
		—	1449	2500								
C3K5	12	2204	—	3801	75000	543421	2000	SK-RM-ACFUSE4-F9	2	1400	SK-RM-DCFUSE1-F8	5
		—	1886	3254			1250	SK-RM-ACFUSE2-F8	1			

(1) Drive input type (position 5 of catalog number) = F (regenerative and low harmonic AFE).
(2) These bus supplies have factory-installed fusing. For user-supplied AC branch circuit protection recommendations, see PowerFlex 750-Series Products with TotalFORCE Control Technical Data, publication 750-TD100.
(3) One kit per power module.

650 Volt DC Input Fuses

Table 18 - PowerFlex 750-Series Drives — Frames 1…7, 650V DC Input Fuses

Cat. No. 20F…/ 20G…(1)	Frame Size	HP Rating		DC Input Rating		Drive DC Bus Capacitance (µF)	Non-time Delay Fuse			
		ND	HD	Amps	kW		Amps	Fuse Cat. No.	Qty.	
									DC+	DC–
D2P1	1	1	—	1.9	1.2	110	6	Bussman JKS-6(2)	1	1
		—	0.5	1.1	0.72		4	Bussman JKS-4 (2)		
D2P1	2	1	—	1.9	1.2	705	6	Bussman JKS-6 (2)	1	1
		—	1	1.9	1.2		6	Bussman JKS-6 (2)		
D3P4	1	2	—	3.0	2.0	165	6	Bussman JKS-6 (2)	1	1
		—	1	1.9	1.2		6	Bussman JKS-6 (2)		
D3P4	2	2	—	3.0	2.0	705	6	Bussman JKS-6 (2)	1	1
		—	2	3.0	2.0		6	Bussman JKS-6 (2)		
D5P0	1	3	—	4.5	2.9	280	10	Bussman JKS-10 (2)	1	1
		—	2	3.0	2.0		6	Bussman JKS-6 (2)		
D5P0	2	3	—	4.5	2.9	705	10	Bussman JKS-10 (2)	1	1
		—	3	4.5	2.9		10	Bussman JKS-10 (2)		
D8P0	1	5	—	8.1	5.3	470	15	Mersen HSJ15 (3)	1	1
		—	3	4.5	2.9		10	Bussman JKS-10 (2)		
D011	1	7.5	—	11.1	7.2	560	20	Mersen HSJ20 (3)	1	1
		—	5	8.1	5.3		15	Mersen HSJ15 (3)		
D011	2	7.5	—	11.1	7.2	705	20	Mersen HSJ20 (3)	1	1
		—	7.5	11.1	7.2		20	Mersen HSJ20 (3)		
D014	1	10	—	14.7	9.6	680	30	Mersen HSJ30 (3)	1	1
		—	7.5	11.1	7.2		20	Mersen HSJ20 (3)		
D014	2	10	—	14.7	9.5	705	30	Mersen HSJ30 (3)	1	1
		—	7.5	11.1	7.2		20	Mersen HSJ20 (3)		
D022	2	15	—	23.3	15.1	1020	40	Mersen HSJ40 (3)	1	1
		—	10	14.7	9.5		30	Mersen HSJ30 (3)		
D027	3	20	—	28.9	18.8	1200	50	Mersen HSJ50 (3)	1	1
		—	15	23.3	15.1		40	Mersen HSJ40 (3)		
D034	3	25	—	36.4	23.6	1500	60	Mersen HSJ60 (3)	1	1
		—	20	28.9	18.8		50	Mersen HSJ50 (3)		
D040	3	30	—	42.9	27.8	1800	80	Mersen HSJ80 (3)	1	1
		—	25	36.4	23.6		60	Mersen HSJ60 (3)		
D052	4	40	—	55.7	36.1	2400	90	Mersen HSJ90 (3)	1	1
		—	30	42.9	27.8		80	Mersen HSJ80 (3)		
D065	4	50	—	69.7	45.1	3000	100	Mersen HSJ100 (3)	1	1
		—	40	55.7	36.1		90	Mersen HSJ90 (3)		
D065	5	50	—	69.7	45.3	3600	100	Mersen HSJ100 (3)	1	1
		—	40	55.7	36.2		90	Mersen HSJ90 (3)		
D077	5	60	—	84.5	54.7	3600	150	Mersen HSJ150 (3)	1	1
		—	50	69.7	45.1		100	Mersen HSJ100 (3)		

Table 18 - PowerFlex 750-Series Drives — Frames 1…7, 650V DC Input Fuses (continued)

Cat. No. 20F…/ 20G…(1)	Frame Size	HP Rating		DC Input Rating		Drive DC Bus Capacitance (µF)	Non-time Delay Fuse			
		ND	HD	Amps	kW		Amps	Fuse Cat. No.	Qty.	
									DC+	DC–
D096	5	75	—	105.3	68.3	4500	175	Mersen HSJ175 (3)	1	1
		—	60	84.5	54.7		150	Mersen HSJ150 (3)		
D096	6	75	—	105.3	68.4	4600	175	Mersen HSJ175 (3)	1	1
		—	60	84.5	54.9		150	Mersen HSJ150 (3)		
D125	6	100	—	137.1	88.9	4600	200	Mersen HSJ200 (3)	1	1
		—	75	105.3	68.3		175	Mersen HSJ175 (3)		
D156	6	125	—	171.2	110.9	9200	300	Mersen HSJ300 (3)	1	1
		—	100	137.1	88.9		200	Mersen HSJ200 (3)		
D186	6	150	—	204.1	132.2	9200	400	Mersen HSJ400 (3)	1	1
		—	125	171.2	110.9		300	Mersen HSJ300 (3)		
D248	6	200	—	272.1	176.3	9200	400	Mersen HSJ400 (3)	1	1
		—	150	204.1	132.2		400	Mersen HSJ400 (3)		
D248	7	200	—	272.1	176.9	13800	400	Mersen HSJ400 (3)	1	1
		—	150	204.1	132.7		400	Mersen HSJ400 (3)		
D302	7	250	—	331.3	214.7	13800	500	Bussman 170M6608 (2)	1	1
		—	200	272.1	176.3		400	Mersen HSJ400 (3)		
D361	7	300	—	396.1	256.6	13800	800	Bussman 170M6612 (2)	1	1
		—	250	331.3	214.7		500	Bussman 170M6608 (2)		
D415	7	350	—	455.3	295.0	18400	900	Bussman 170M6613 (2)	1	1
		—	300	396.1	256.6		800	Bussman 170M6612 (2)		
D477	7	400	—	523.3	340.1	18400	900	Bussman 170M6613 (2)	1	1
		—	300	396.1	257.5		800	Bussman 170M6612 (2)		

(1) Drive input type (position 5 of catalog number) = 1 (AC input with precharge, includes DC terminals) or 4 (DC input with precharge).

(2) See Fuse Certification and Test Data on page 50 for fuse self-certification and test data for Bussmann 170M and JKS fuses that are recommended for the DC bus fusing.

(3) A test program was developed to confirm that the HSJ (High Speed J) fuses meet or exceed the requirements set forth by Rockwell Automation for the fuses on the common DC bus for all Allen-Bradley architecture, component, and legacy drives. The criteria for acceptance was:
- 600V AC rectified, 810V DC average, fuses located at (+) and (-) leg. Short circuit test at 65 kA.
- Time constant minimum 3 milliseconds (maximum 15 milliseconds).
- No over-load protection required.
- Let thru must be less than rating of the conductors.

This testing is listed in UL file E2137 Vol2 Sec 31 page 1 and in CSA report 1662646.

Table 19 - PowerFlex 755TM Common Bus Inverters — Frames 8…12, 650V DC (480V AC)

Cat. No. 20G…[1]	Frame Size	HP Rating (AC Output)		DC Input Rating		Drive DC Bus Capacitance (µF)	Non-time Delay Fuse - DC Input[2]		
		Continuous		Continuous			Amps	Fuse Cat. No.	Qty.[3]
		ND	HD	Amps	kW				
D302	8	250	—	333	216.5	9000	1400	SK-RM-DCFUSE1-F8	1
		—	200	274	178.1				
D361	8	300	—	399	259.4	9000	1400	SK-RM-DCFUSE1-F8	1
		—	250	333	216.5				
D430	8	350	—	475	308.8	9000	1400	SK-RM-DCFUSE1-F8	1
		—	300	399	259.4				
D505	8	400	—	558	362.7	9000	1400	SK-RM-DCFUSE1-F8	1
		—	350	475	308.8				
D545	8	450	—	602	391.3	15000	1400	SK-RM-DCFUSE1-F8	1
		—	350	475	308.8				
D617	8	500	—	681	442.7	15000	1400	SK-RM-DCFUSE1-F8	1
		—	400	535	347.8				
D710	8	600	—	784	509.6	15000	1400	SK-RM-DCFUSE1-F8	1
		—	450	602	391.3				
D740	8	650	—	817	531.1	15000	1400	SK-RM-DCFUSE1-F8	1
		—	500	681	442.7				
D800	9	700	—	883	574.0	18000	1400	SK-RM-DCFUSE1-F8	2
		—	600	817	531.1				
D960	9	800	—	1060	689.0	18000	1400	SK-RM-DCFUSE1-F8	2
		—	700	883	574.0				
D1K0	9	900	—	1154	750.1	30000	1400	SK-RM-DCFUSE1-F8	2
		—	750	1060	689.0				
D1K1	9	1000	—	1253	814.5	30000	1400	SK-RM-DCFUSE1-F8	2
		—	800	1154	750.1				
D1K3	9	1100	—	1507	979.6	30000	1400	SK-RM-DCFUSE1-F8	2
		—	900	1253	814.5				
D1K4	10	1250	—	1568	1019.2	45000	1400	SK-RM-DCFUSE1-F8	3
		—	1000	1507	979.6				
D1K6	10	1500	—	1827	1187.6	45000	1400	SK-RM-DCFUSE1-F8	3
		—	1100	1568	1019.2				
D2K0	10	1800	—	2288	1487.2	45000	1400	SK-RM-DCFUSE1-F8	3
		—	1500	1827	1187.6				
D2K6	11	2400	—	3023	1965.0	60000	1400	SK-RM-DCFUSE1-F8	4
		—	2000	2473	1607.5				
D3K4	12	3000	—	3758	2442.7	75000	1400	SK-RM-DCFUSE1-F8	5
		—	2400	3290	2138.5				

(1) Drive input type (position 5 of catalog number) = D (common bus with DC precharge) or E (common bus without DC precharge).
(2) These drives have factory-installed fusing.
(3) One kit per power module.

Table 20 - Kinetix 5700 Modules (480V AC) (1)(2)

Module Cat. No.	Frame Width (mm)	kW Rating (AC Output)	DC Input Rating		Module DC Bus Capacitance (µF)
		Continuous	Continuous		
		ND	Amps	kW	
2198-D006-ERSx	55	1	2.7	1.8	165
2198-D012-ERSx	55	2	5.3	3.5	165
2198-D020-ERSx	55	3	8.5	5.7	330
2198-D032-ERSx	55	5	13.7	9.1	390
2198-D057-ERSx	85	7.5	24.5	16.3	705
2198-S086-ERSx	85	50	45.7	30.4	560
2198-S130-ERSx	85	75	69	45.9	840
2198-S160-ERSx	100	200	92.3	61.4	1120
2198-CAPMOD-2240	55	75	100	N/A	2240
2198-CAPMOD-DCBUS-IO	55	200	200(3)	N/A	N/A

(1) For the Kinetix 5700 single- and dual-axis servo drives, fuse is internal to product and is not field replaceable.

(2) Only one set of DC+/DC- fuse is required for each cluster of common bus drives. The fuse sizes are chosen based on the DC current rating of the drive cluster. See the fusing section in the Kinetix 5700 User Manual, publication 2198-UM002, for cluster fusing recommendations.

(3) When used with the capacitor module (2198-CAPMOD-2240), the appropriate bus bars, and following the installation instructions in the Kinetix 5700 Capacitor Modules Installation Instructions, publication 2198-IN008.

Table 21 - PowerFlex 755TM Bus Supplies — Frames 8…12, 480V AC (696V DC)

Cat. No. 20J…[1]	Frame Size	DC Output Rating			Drive DC Bus Capacitance (µF)	Maximum External DC Bus Capacitance (µF)	Non-time Delay Fuse - AC Input[2]			Non-time Delay Fuse - DC Output[2]		
		kW Rating		Continuous			Amps	Fuse Cat. No.	Qty.[3]	Amps	Fuse Cat. No.	Qty.[3]
		ND	HD	Amps								
D302	8	216	—	311	9000	43799	900	SK-RM-ACFUSE1-F8	1	1400	SK-RM-DCFUSE1-F8	1
		—	177	255								
D361	8	258	—	371	9000	52482	900	SK-RM-ACFUSE1-F8	1	1400	SK-RM-DCFUSE1-F8	1
		—	216	311								
D430	8	307	—	442	9000	62637	900	SK-RM-ACFUSE1-F8	1	1400	SK-RM-DCFUSE1-F8	1
		—	258	371								
D505	8	361	—	519	9000	73676	900	SK-RM-ACFUSE1-F8	1	1400	SK-RM-DCFUSE1-F8	1
		—	307	442								
D545	8	390	—	560	15000	79563	1250	SK-RM-ACFUSE2-F8	1	1400	SK-RM-DCFUSE1-F8	1
		—	307	442								
D617	8	442	—	635	15000	90159	1250	SK-RM-ACFUSE2-F8	1	1400	SK-RM-DCFUSE1-F8	1
		—	347	499								
D710	8	508	—	730	15000	103847	1250	SK-RM-ACFUSE2-F8	1	1400	SK-RM-DCFUSE1-F8	1
		—	390	560								
D740	8	529	—	761	15000	108262	1250	SK-RM-ACFUSE2-F8	1	1400	SK-RM-DCFUSE1-F8	1
		—	442	635								
D800	9	573	—	823	18000	117092	1800	SK-RM-ACFUSE3-F9	1	1400	SK-RM-DCFUSE1-F8	2
		—	529	761								
D960	9	687	—	987	18000	140641	1800	SK-RM-ACFUSE3-F9	1	1400	SK-RM-DCFUSE1-F8	2
		—	573	823								
D1K0	9	748	—	1075	30000	153150	2000	SK-RM-ACFUSE4-F9	1	1400	SK-RM-DCFUSE1-F8	2
		—	687	987								
D1K1	9	812	—	1167	30000	166396	2000	SK-RM-ACFUSE4-F9	1	1400	SK-RM-DCFUSE1-F8	2
		—	748	1075								
D1K3	9	977	—	1404	30000	200247	2000	SK-RM-ACFUSE4-F9	1	1400	SK-RM-DCFUSE1-F8	2
		—	812	1167								
D1K4	10	1016	—	1460	45000	208341	2000	SK-RM-ACFUSE4-F9	1	1400	SK-RM-DCFUSE1-F8	3
		—	977	1404			1250	SK-RM-ACFUSE2-F8	1			
D1K6	10	1184	—	1702	45000	242927	2000	SK-RM-ACFUSE4-F9	1	1400	SK-RM-DCFUSE1-F8	3
		—	1016	1460			1250	SK-RM-ACFUSE2-F8	1			
D2K0	10	1483	—	2131	45000	304300	2000	SK-RM-ACFUSE4-F9	1	1400	SK-RM-DCFUSE1-F8	3
		—	1184	1702			1250	SK-RM-ACFUSE2-F8	1			
D2K6	11	1959	—	2816	60000	402319	2000	SK-RM-ACFUSE4-F9	2	1400	SK-RM-DCFUSE1-F8	4
		—	1603	2304								
D3K4	12	2436	—	3501	75000	500337	2000	SK-RM-ACFUSE4-F9	2	1400	SK-RM-DCFUSE1-F8	5
		—	2132	3065			1250	SK-RM-ACFUSE2-F8	1			

(1) Drive input type (position 5 of catalog number) = F (regenerative and low harmonic AFE).

(2) These bus supplies have factory-installed fusing. For user-supplied AC branch circuit protection recommendations, see PowerFlex 750-Series Products with TotalFORCE Control Technical Data, publication 750-TD100.

(3) One kit per power module.

810 Volt DC Input Fuses

Table 22 - PowerFlex 750-Series Drives — Frames 3…7, 810V DC (600V AC) Input Fuses

Cat. No. 20F…/ 20G…[1]	Frame Size	HP Rating		DC Input Rating		Drive DC Bus Capacitance (µF)	Non-time Delay Fuse			
		ND	HD	Amps	kW		Amps	Fuse Cat. No.	Qty.	
									DC+	DC–
E1P7	3	1	—	1.9	1.5	1200	4	Bussman JKS-4 [2]	1	1
		—	0.5	1.0	0.8		2	Bussman JKS-2 [2]		
E2P7	3	2	—	3.0	2.4	1200	5	Bussman JKS-5 [2]	1	1
		—	1	1.9	1.5		4	Bussman JKS-4 [2]		
E3P9	3	3	—	4.3	3.5	1200	8	Bussman JKS-8 [2]	1	1
		—	2	3.0	2.4		5	Bussman JKS-5 [2]		
E6P1	3	5	—	6.7	5.4	1200	10	Bussman JKS-10 [2]	1	1
		—	3	4.3	3.5		8	Bussman JKS-8 [2]		
E9P0	3	7.5	—	9.9	8.0	1200	15	Mersen HSJ15 [3]	1	1
		—	5	6.7	5.4		10	Mersen HSJ10 [3]		
E011	3	10	—	12.0	9.7	1200	20	Mersen HSJ20 [3]	1	1
		—	7.5	9.9	8.0		15	Mersen HSJ15 [3]		
E012	6	10	—	13.1	10.6	5850	20	Mersen HSJ20 [3]	1	1
		—	7.5	10.0	8.1		15	Mersen HSJ15 [3]		
E017	3	15	—	18.6	15.1	1200	30	Mersen HSJ30 [3]	1	1
		—	10	12.0	9.7		20	Mersen HSJ20 [3]		
E018	6	15	—	19.7	16.0	5850	30	Mersen HSJ30 [3]	1	1
		—	10	13.1	10.6		20	Mersen HSJ20 [3]		
E022	3	20	—	24.1	19.5	1200	40	Mersen HSJ40 [3]	1	1
		—	15	18.6	15.1		30	Mersen HSJ30 [3]		
E023	6	20	—	25.2	20.4	5850	40	Mersen HSJ40 [3]	1	1
		—	15	19.7	16.0		30	Mersen HSJ30 [3]		
E024	6	20	—	26.3	21.3	5850	40	Mersen HSJ40 [3]	1	1
		—	20	24.1	19.5		40	Mersen HSJ40 [3]		
E027	4	25	—	29.6	24.0	1800	50	Mersen HSJ50 [3]	1	1
		—	20	24.1	19.5		40	Mersen HSJ40 [3]		
E028	6	25	—	30.7	24.9	5850	50	Mersen HSJ50 [3]	1	1
		—	20	25.2	20.4		40	Mersen HSJ40 [3]		
E032	4	30	—	35.0	28.4	1800	60	Mersen HSJ60 [3]	1	1
		—	25	29.6	24.0		50	Mersen HSJ50 [3]		
E033	6	30	—	36.1	29.2	5850	60	Mersen HSJ60 [3]	1	1
		—	25	30.7	24.9		50	Mersen HSJ50 [3]		
E041	5	40	—	44.9	36.4	3600	70	Mersen HSJ70 [3]	1	1
		—	30	35.0	28.4		60	Mersen HSJ60 [3]		
E042	6	40	—	46.0	37.3	5850	70	Mersen HSJ70 [3]	1	1
		—	30	36.1	29.2		60	Mersen HSJ60 [3]		
E052	5	50	—	56.9	46.1	3600	90	Mersen HSJ90 [3]	1	1
		—	40	44.9	36.4		70	Mersen HSJ70 [3]		

Table 22 - PowerFlex 750-Series Drives — Frames 3…7, 810V DC (600V AC) Input Fuses (continued)

Cat. No. 20F…/ 20G…(1)	Frame Size	HP Rating		DC Input Rating		Drive DC Bus Capacitance (µF)	Non-time Delay Fuse			
		ND	HD	Amps	kW		Amps	Fuse Cat. No.	Qty.	
									DC+	DC–
E053	6	50	—	58.0	47.0	5850	90	Mersen HSJ90 (3)	1	1
		—	40	46.0	37.3		70	Mersen HSJ70 (3)		
E063	6	60	—	69.0	55.9	11700	110	Mersen HSJ110 (3)	1	1
		—	50	58.0	47.0		90	Mersen HSJ90 (3)		
E077	6	75	—	84.3	68.3	11700	150	Mersen HSJ150 (3)	1	1
		—	60	69.0	55.9		110	Mersen HSJ110 (3)		
E099	6	100	—	108.4	87.8	11700	175	Mersen HSJ175 (3)	1	1
		—	75	84.3	68.3		150	Mersen HSJ150 (3)		
E125	6	125	—	136.8	110.8	11700	225	Mersen HSJ225 (3)	1	1
		—	100	108.4	87.8		175	Mersen HSJ175 (3)		
E144	6	150	—	157.6	127.7	11700	250	Mersen HSJ250 (3)	1	1
		—	125	136.8	110.8		225	Mersen HSJ225 (3)		
E192	7	200	—	210.2	170.3	23400	350	Mersen HSJ350 (3)	1	1
		—	150	157.6	127.7		250	Mersen HSJ250 (3)		
E242	7	250	—	264.9	214.6	23400	400	Mersen HSJ400 (3)	1	1
		—	200	210.2	170.3		350	Mersen HSJ350 (3)		
E289	7	300	—	316.4	256.3	23400	500	Mersen HSJ500 (3)	1	1
		—	250	264.9	214.6		400	Mersen HSJ400 (3)		

(1) Drive input type (position 5 of catalog number) = 1 (AC input with precharge, includes DC terminals) or 4 (DC input with precharge).

(2) See Fuse Certification and Test Data on page 50 for fuse self-certification and test data for Bussmann 170M and JKS fuses that are recommended for the DC bus fusing.

(3) A test program was developed to confirm that the HSJ (High Speed J) fuses meet or exceed the requirements set forth by Rockwell Automation for the fuses on the common DC bus for all Allen-Bradley architecture, component, and legacy drives. The criteria for acceptance was:
- 600V AC rectified, 810V DC average, fuses located at (+) and (-) leg. Short circuit test at 65 kA.
- Time constant minimum 3 milliseconds (maximum 15 milliseconds).
- No over-load protection required.
- Let thru must be less than rating of the conductors.

This testing is listed in UL file E2137 Vol2 Sec 31 page 1 and in CSA report 1662646.

Table 23 - PowerFlex 755TM Common Bus Inverters — Frames 8…12, 810V DC (600V AC)

Cat. No. 20G…(1)	Frame Size	HP Rating (AC Output)		DC Input Rating		Drive DC Bus Capacitance (µF)	Non-time Delay Fuse - DC Input(2)		
		Continuous		Continuous			Amps	Fuse Cat. No.	Qty.(3)
		ND	HD	Amps	kW				
E242	8	250	—	267	216.3	4650	1100	SK-RM-DCFUSE2-F8	1
		—	200	212	171.7				
E295	8	300	—	326	264.1	4650	1100	SK-RM-DCFUSE2-F8	1
		—	250	267	216.3				
E355	8	350	—	392	317.5	4650	1100	SK-RM-DCFUSE2-F8	1
		—	300	326	264.1				
E395	8	400	—	436	353.2	4650	1100	SK-RM-DCFUSE2-F8	1
		—	350	392	317.5				
E435	8	450	—	480	388.8	7750	1100	SK-RM-DCFUSE2-F8	1
		—	400	436	353.2				
E545	8	550	—	602	487.6	7750	1100	SK-RM-DCFUSE2-F8	1
		—	450	497	402.6				
E595	9	600	—	640	518.4	9300	1100	SK-RM-DCFUSE2-F8	2
		—	550	602	487.6				
E690	9	700	—	762	617.2	9300	1100	SK-RM-DCFUSE2-F8	2
		—	600	640	518.4				
E760	9	800	—	839	679.6	15500	1100	SK-RM-DCFUSE2-F8	2
		—	700	762	617.2				
E825	9	900	—	911	737.9	15500	1100	SK-RM-DCFUSE2-F8	2
		—	800	839	679.6				
E980	9	1000	—	1082	876.4	15500	1100	SK-RM-DCFUSE2-F8	2
		—	900	911	737.9				
E1K1	10	1100	—	1154	934.7	23250	1100	SK-RM-DCFUSE2-F8	3
		—	1000	1082	876.4				
E1K2	10	1250	—	1347	1091.1	23250	1100	SK-RM-DCFUSE2-F8	3
		—	1100	1154	934.7				
E1K5	10	1500	—	1579	1279.0	23250	1100	SK-RM-DCFUSE2-F8	3
		—	1250	1347	1091.1				
E2K0	11	2000	—	2148	1739.9	31000	1100	SK-RM-DCFUSE2-F8	4
		—	1800	1877	1520.4				
E2K4	12	2500	—	2672	2164.3	38750	1100	SK-RM-DCFUSE2-F8	5
		—	2100	2285	1850.9				

(1) Drive input type (position 5 of catalog number) = D (common bus with DC precharge) or E (common bus without DC precharge).
(2) These drives have factory-installed fusing. For user-supplied AC branch circuit protection recommendations, see PowerFlex 750-Series Products with TotalFORCE Control Technical Data, publication 750-TD100.
(3) One kit per power module.

Table 24 - PowerFlex 755TM Bus Supplies — Frames 8…12, 600V AC (870V DC)

Cat. No. 20J…[1]	Frame Size	DC Output Rating			Drive DC Bus Capacitance (µF)	Maximum External DC Bus Capacitance (µF)	Non-Time Delay Fuse - AC Input[2]			Non-Time Delay Fuse - DC Output[2]		
		kW Rating		Continuous			Amps	Fuse Cat. No.	Qty. [3]	Amps	Fuse Cat. No.	Qty. [3]
		ND	HD	Amps								
E242	8	217	-	249	4650	24122	700	SK-RM-ACFUSE5-F8	1	1100	SK-RM-DCFUSE2-F8	1
		-	171	197								
E295	8	263	-	303	4650	29582	700	SK-RM-ACFUSE5-F8	1	1100	SK-RM-DCFUSE2-F8	1
		-	217	249								
E355	8	317	-	365	4650	35763	700	SK-RM-ACFUSE5-F8	1	1100	SK-RM-DCFUSE2-F8	1
		-	263	303								
E395	8	353	-	406	4650	39884	700	SK-RM-ACFUSE5-F8	1	1100	SK-RM-DCFUSE2-F8	1
		-	317	365								
E435	8	389	-	447	7750	44005	900	SK-RM-ACFUSE1-F8	1	1100	SK-RM-DCFUSE2-F8	1
		-	353	406								
E545	8	487	-	560	7750	55337	900	SK-RM-ACFUSE1-F8	1	1100	SK-RM-DCFUSE2-F8	1
		-	403	463								
E595	9	518	-	596	9300	58943	1250	SK-RM-ACFUSE2-F8	1	1100	SK-RM-DCFUSE2-F8	2
		-	487	560								
E690	9	617	-	710	9300	70276	1250	SK-RM-ACFUSE2-F8	1	1100	SK-RM-DCFUSE2-F8	2
		-	532	612								
E760	9	680	-	782	15500	77487	1250	SK-RM-ACFUSE2-F8	1	1100	SK-RM-DCFUSE2-F8	2
		-	617	710								
E825	9	737	-	848	15500	84184	1600	SK-RM-ACFUSE6-F9	1	1100	SK-RM-DCFUSE2-F8	2
		-	680	782								
E980	9	877	-	1008	15500	100152	1600	SK-RM-ACFUSE6-F9	1	1100	SK-RM-DCFUSE2-F8	2
		-	737	848								
E1K1	10	935	-	1075	23250	106849	1600	SK-RM-ACFUSE6-F9	1	1100	SK-RM-DCFUSE2-F8	3
		-	877	1008			900	SK-RM-ACFUSE1-F8	1			
E1K2	10	1091	-	1255	23250	124878	1600	SK-RM-ACFUSE6-F9	1	1100	SK-RM-DCFUSE2-F8	3
		-	935	1075			900	SK-RM-ACFUSE1-F8	1			
E1K5	10	1279	-	1471	23250	146513	1600	SK-RM-ACFUSE6-F9	1	1100	SK-RM-DCFUSE2-F8	3
		-	1091	1255			900	SK-RM-ACFUSE1-F8	1			
E2K0	11	1740	-	2001	31000	199672	1600	SK-RM-ACFUSE6-F9	2	1100	SK-RM-DCFUSE2-F8	4
		-	1520	1748								
E2K4	12	2164	-	2489	38750	248505	1600	SK-RM-ACFUSE6-F9	2	1100	SK-RM-DCFUSE2-F8	5
		-	1851	2129			900	SK-RM-ACFUSE1-F8	1			

(1) Drive input type (digit 5 of catalog number) = F (regenerative and low harmonic AFE).

(2) These bus supples have factory-installed fusing. For user-supplied AC branch circuit protection recommendations, see PowerFlex 750-Series Products with TotalFORCE Control Technical Data, publication 750-TD100.

(3) One kit per power module.

932 Volt DC Input Fuses

Table 25 - PowerFlex 750-Series Drives — Frames 6 and 7, 932V DC Input Fuses

Cat. No. 20F…/20G…(1)	Frame Size	kW Rating		DC Input Rating		Drive DC Bus Capacitance (µF)	Non-time Delay Fuse			
		ND	HD	Amps	kW		Amps	Fuse Cat. No.	Qty.	
									DC+	DC–
F012	6	7.5	—	13.2	12.3	5850	20	Mersen HSJ20 (2)	1	1
		—	5.5	9.9	9.2		15	Mersen HSJ15 (2)		
F015	6	11	—	16.5	15.4	5850	25	Mersen HSJ25 (2)	1	1
		—	7.5	13.2	12.3		20	Mersen HSJ20 (2)		
F020	6	15	—	21.9	20.4	5850	35	Mersen HSJ35 (2)	1	1
		—	11	16.5	15.4		25	Mersen HSJ25 (2)		
F023	6	18.5	—	25.2	23.5	5850	40	Mersen HSJ40 (2)	1	1
		—	15	21.9	20.4		35	Mersen HSJ35 (2)		
F030	6	22	—	32.9	30.7	5850	50	Mersen HSJ50 (2)	1	1
		—	18.5	25.2	23.5		40	Mersen HSJ40 (2)		
F034	6	30	—	37.3	34.8	5850	60	Mersen HSJ60 (2)	1	1
		—	22	32.9	30.7		50	Mersen HSJ50 (2)		
F046	6	37	—	50.5	47.1	5850	80	Mersen HSJ80 (2)	1	1
		—	30	37.5	34.8		60	Mersen HSJ60 (2)		
F050	6	45	—	54.8	51.1	5850	90	Mersen HSJ90 (2)	1	1
		—	37	50.5	47.1		80	Mersen HSJ80 (2)		
F061	6	55	—	66.9	62.4	11700	100	Mersen HSJ100 (2)	1	1
		—	45	54.8	51.1		90	Mersen HSJ90 (2)		
F082	6	75	—	89.9	83.8	11700	150	Mersen HSJ150 (2)	1	1
		—	55	66.9	62.4		100	Mersen HSJ100 (2)		
F098	6	90	—	107.5	100.2	11700	175	Mersen HSJ175 (2)	1	1
		—	75	89.9	83.8		150	Mersen HSJ150 (2)		
F119	6	110	—	130.5	121.6	11700	200	Mersen HSJ200 (2)	1	1
		—	90	107.5	100.2		175	Mersen HSJ175 (2)		
F142	6	132	—	155.7	145.1	11700	250	Mersen HSJ250 (2)	1	1
		—	110	130.5	121.6		200	Mersen HSJ200 (2)		
F171	7	160	—	187.5	174.8	23400	300	Mersen HSJ300 (2)	1	1
		—	132	155.7	145.1		250	Mersen HSJ250 (2)		
F212	7	200	—	232.5	216.7	23400	350	Mersen HSJ350 (2)	1	1
		—	160	187.5	174.8		300	Mersen HSJ300 (2)		
F263	7	250	—	288.4	268.8	23400	500	Mersen HSJ500 (2)	1	1
		—	200	232.5	216.7		350	Mersen HSJ350 (2)		

(1) Drive input type (position 5 of catalog number) = 1 (AC input with precharge, includes DC terminals) or 4 (DC input with precharge).

(2) A test program was developed to confirm that the HSJ (High Speed J) fuses meet or exceed the requirements set forth by Rockwell Automation for the fuses on the common DC bus for all Allen-Bradley architecture, component, and legacy drives. The criteria for acceptance was:
- 600V AC rectified, 810V DC average, fuses located at (+) and (-) leg. Short circuit test at 65 kA.
- Time constant minimum 3 milliseconds (maximum 15 milliseconds).
- No over-load protection required.
- Let thru must be less than rating of the conductors.

This testing is listed in UL file E2137 Vol2 Sec 31 page 1 and in CSA report 1662646.

Table 26 - PowerFlex 755TM Common Bus Inverters — Frames 8…12, 932V DC (690V AC)

Cat. No. 20G…[1]	Frame Size	kW Rating (AC Output)		DC Input Rating		Drive DC Bus Capacitance (µF)	Non-time Delay Fuse - DC Input [2]		
		Continuous		Continuous			Amps	Fuse Cat. No.	Qty. [3]
		ND	HD	Amps	kW				
F215	8	200	—	237	220.9	4650	1100	SK-RM-DCFUSE2-F8	1
		—	160	188	175.2				
F265	8	250	—	292	272.1	4650	1100	SK-RM-DCFUSE2-F8	1
		—	200	237	220.9				
F330	8	315	—	364	339.2	4650	1100	SK-RM-DCFUSE2-F8	1
		—	250	292	272.1				
F370	8	355	—	408	380.3	4650	1100	SK-RM-DCFUSE2-F8	1
		—	315	364	339.2				
F415	8	400	—	457	425.9	7750	1100	SK-RM-DCFUSE2-F8	1
		—	355	408	380.3				
F505	8	500	—	556	518.2	7750	1100	SK-RM-DCFUSE2-F8	1
		—	400	457	425.9				
F565	9	560	—	623	580.6	9300	1100	SK-RM-DCFUSE2-F8	2
		—	500	556	518.2				
F650	9	630	—	716	667.3	9300	1100	SK-RM-DCFUSE2-F8	2
		—	560	623	580.6				
F735	9	710	—	810	754.9	15500	1100	SK-RM-DCFUSE2-F8	2
		—	630	716	667.3				
F820	9	800	—	904	842.5	15500	1100	SK-RM-DCFUSE2-F8	2
		—	710	810	754.9				
F920	9	900	—	1014	945.0	15500	1100	SK-RM-DCFUSE2-F8	2
		—	800	904	842.5				
F1K0	10	1000	—	1135	1057.8	23250	1100	SK-RM-DCFUSE2-F8	3
		—	900	1014	945.0				
F1K1	10	1100	—	1267	1180.8	23250	1100	SK-RM-DCFUSE2-F8	3
		—	1000	1135	1057.8				
F1K4	10	1400	—	1564	1457.6	23250	1100	SK-RM-DCFUSE2-F8	3
		—	1100	1280	1193.0				
F1K8	11	1800	—	2055	1915.3	31000	1100	SK-RM-DCFUSE2-F8	4
		—	1500	1692	1576.9				
F2K3	12	2300	—	2554	2380.3	38750	1100	SK-RM-DCFUSE2-F8	5
		—	2000	2226	2074.6				

(1) Drive input type (position 5 of catalog number) = D (common bus with DC precharge) or E (common bus without DC precharge).
(2) These drives have factory-installed fusing.
(3) One kit per power module.

Table 27 - PowerFlex 755TM Bus Supplies — Frames 8…12, 690V AC (1000V DC)

Cat. No. 20J…[1]	Frame Size	DC Output Rating			Drive DC Bus Capacitance (µF)	Maximum External DC Bus Capacitance (µF)	Non-time Delay Fuse - AC Input[2]			Non-time Delay Fuse - DC Output[2]		
		kW Rating		Continuous			Amps	Fuse Cat. No.	Qty.[3]	Amps	Fuse Cat. No.	Qty.[3]
		ND	HD	Amps								
F215	8	221	—	221	4650	21177	700	SK-RM-ACFUSE5-F8	1	1100	SK-RM-DCFUSE2-F8	1
		—	176	176								
F265	8	272	—	272	4650	26318	700	SK-RM-ACFUSE5-F8	1	1100	SK-RM-DCFUSE2-F8	1
		—	221	221								
F330	8	339	—	339	4650	33002	700	SK-RM-ACFUSE5-F8	1	1100	SK-RM-DCFUSE2-F8	1
		—	272	272								
F370	8	380	—	380	4650	37115	700	SK-RM-ACFUSE5-F8	1	1100	SK-RM-DCFUSE2-F8	1
		—	339	339								
F415	8	426	—	426	7750	41742	900	SK-RM-ACFUSE1-F8	1	1100	SK-RM-DCFUSE2-F8	1
		—	380	380								
F505	8	518	—	518	7750	50997	900	SK-RM-ACFUSE1-F8	1	1100	SK-RM-DCFUSE2-F8	1
		—	426	426								
F565	9	580	—	580	9300	57166	1250	SK-RM-ACFUSE2-F8	1	1100	SK-RM-DCFUSE2-F8	2
		—	518	518								
F650	9	667	—	667	9300	65907	1250	SK-RM-ACFUSE2-F8	1	1100	SK-RM-DCFUSE2-F8	2
		—	580	580								
F735	9	754	—	754	15500	74647	1250	SK-RM-ACFUSE2-F8	1	1100	SK-RM-DCFUSE2-F8	2
		—	667	667								
F820	9	842	—	842	15500	83388	1600	SK-RM-ACFUSE6-F9	1	1100	SK-RM-DCFUSE2-F8	2
		—	754	754								
F920	9	944	—	944	15500	93670	1600	SK-RM-ACFUSE6-F9	1	1100	SK-RM-DCFUSE2-F8	2
		—	842	842								
F1K0	10	1057	—	1057	23250	104981	1250	SK-RM-ACFUSE2-F8	1	1100	SK-RM-DCFUSE2-F8	3
		—	944	944			900	SK-RM-ACFUSE1-F8	1			
F1K1	10	1180	—	1180	23250	117321	1250	SK-RM-ACFUSE2-F8	1	1100	SK-RM-DCFUSE2-F8	3
		—	1057	1057			900	SK-RM-ACFUSE1-F8	1			
F1K4	10	1456	—	1456	23250	144982	1250	SK-RM-ACFUSE2-F8	1	1100	SK-RM-DCFUSE2-F8	3
		—	1193	1193			900	SK-RM-ACFUSE1-F8	1			
F1K8	11	1914	—	1914	31000	190843	1600	SK-RM-ACFUSE6-F9	2	1100	SK-RM-DCFUSE2-F8	4
		—	1576	1576								
F2K3	12	2379	—	2379	38750	237424	1600	SK-RM-ACFUSE6-F9	2	1100	SK-RM-DCFUSE2-F8	5
		—	2073	2073			900	SK-RM-ACFUSE1-F8	1			

(1) Drive input type (position 5 of catalog number) = F (regenerative and low harmonic AFE).
(2) These bus supplies have factory-installed fusing. For user-supplied AC branch circuit protection recommendations, see PowerFlex 750-Series Products with TotalFORCE Control Technical Data, publication 750-TD100.
(3) One kit per power module.

Fuse Certification and Test Data

The following are copies of self-certification letters and test data for JKS and 170M fuses that are recommended in the previous tables in this Appendix for DC input fusing.

Configuration A indicates one fuse in the (+) leg and one fuse in the (-) leg of the DC bus.

JKS Fuses

Cooper Bussmann
P. O. Box 14460
St. Louis, MO 63178-4460

January 25, 2002

Sr. Project Engineer
Rockwell Automation
6400 West Enterprise Drive
P.O. Box 760
Mequon, WI 53092

Subject: DC Testing for JKS Fuses

Dear Mr.

At the request of Rockwell Automation, Bussmann has completed the DC testing for the JKS fuses and is pleased to present the attached information indicating successful 'Self-Certification DC Rating' on all subject fuses.

Bussmann tested fuses to the following parameters specified by Rockwell Automation:

Short Circuit Current	=	65 kA
Voltage	=	810V DC
Time Constant	≥	0.4 ms

Additional tests were performed for acceptability.

Short Circuit Current	≅	30 times fuse amperage
Voltage	=	810V DC
Time Constant	≥	0.4 ms

The attached table identifies the fuses tested, the actual circuit parameters and the circuit configuration. In the attached table, the Interrupting Amps column specifies the fuses minimum and maximum amps the fuse will safely clear at 810V DC.

Circuit Configuration A

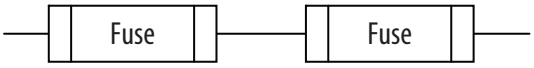

By way of this correspondence, Cooper Bussmann self-certifies the preceding fuses in end-user applications to the preceding parameters and the attached data sheet.

Should you have any questions regarding this correspondence, please contact me at the listed address and numbers.

Regards,

Strategic OEM Accounts Manager
Cooper Bussmann

Table 28 - Cooper Bussmann JKS, DC Fuse Test for Rockwell Automation

Fuse	Results	Circuit Parameters				
		Interrupting Amps		Volts DC	Time Constant	Circuit Configuration
		Min	Max			
JKS-(3A…15A)	Acceptable	—	69.6 kA	810	2.78 ms	Configuration A
JKS-(3A…15A)	Acceptable	375 A	—	810	0.55 ms	Configuration A
JKS-(20A…30A)	Acceptable	—	69.6 kA	816	2.78 ms	Configuration A
JKS-(20A…30A)	Acceptable	920 A	—	812	0.4 ms	Configuration A
JKS-(35A…60A)	Acceptable	—	69.6 kA	816	2.78 ms	Configuration A
JKS-(35A…60A)	Acceptable	1820 A	—	812	0.5 ms	Configuration A
JKS-(70A…100A)	Acceptable	—	69.6 kA	816	2.78 ms	Configuration A
JKS-(70A…100A)	Acceptable	2950 A	—	812	0.86 ms	Configuration A
JKS-(110A…200A)	Acceptable	—	69.6 kA	816	2.78 ms	Configuration A
JKS-(110A…200A)	Acceptable	5960 A	—	810	3.34 ms	Configuration A
JKS-(225A…400A)	Acceptable	—	69.6 kA	816	2.78 ms	Configuration A
JKS-(225A…400A)	Acceptable	11.5 kA	—	812	2.92 ms	Configuration A
JKS-(450A…600A)	Acceptable	—	69.6 kA	816	2.78 ms	Configuration A
JKS-(450A…600A)	Acceptable	15.5 kA	—	810	0.4 ms	Configuration A

170M Fuses

Cooper Bussmann
P. O. Box 14460
St. Louis, MO 63178-4460

May 15, 2002

Sr. Project Engineer
Rockwell Automation
6400 West Enterprise Drive
P.O. Box 760
Mequon, WI 53092

Subject: DC Testing for 170M Fuses

Dear Mr.

At the request of Rockwell Automation, Bussmann has completed the DC testing for the 170M fuses and is pleased to present the attached information indicating successful 'Self-Certification DC Rating' on all subject fuses.

Bussmann tested fuses to the following parameters specified by Rockwell Automation:

Short Circuit Current	=	65 kA and 100 kA
Voltage	=	810V DC
Time Constant	≥	0.4 ms

Additional tests were performed for acceptability.

Short Circuit Current	≅	30 times fuse amperage as minimum current interrupting rating or as tested
Voltage	=	810V DC
Time Constant	≥	0.4 ms

The attached table identifies the fuses tested, the actual circuit parameters and the circuit configuration. In the attached table, the Interrupting Amps column specifies the fuses minimum and maximum amps the fuse will safely clear at 810V DC.

Circuit Configuration A

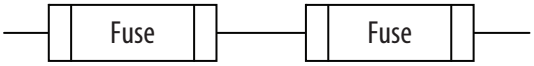

By way of this correspondence, Cooper Bussmann self-certifies the preceding fuses in end-user applications to the preceding parameters and the attached data sheet.

Should you have any questions regarding this correspondence, please contact me at the listed address and numbers.

Regards,

Strategic OEM Accounts Manager
Cooper Bussmann

Table 29 - Cooper Bussmann 170M, DC Fuse Test for Rockwell Automation

Fuse	Results	Circuit Parameters				
		Interrupting Amps		Volts DC	Time Constant	Circuit Configuration
		Min	Max			
170M6646	Acceptable	—	69.8 kA	812	2 ms	Configuration A
170M6646	Acceptable	10.2 kA	—	812	1.66 ms	Configuration A
170M6650	Acceptable	—	69.6 kA	812	2 ms	Configuration A
170M6650	Acceptable	21.1 kA	—	812	1.2 ms	Configuration A
170M7510		—	65 kA	810	2 ms	
170M7510		20 kA	—	810	2 ms	
170M6792		—	65 kA	810	2 ms	
170M6792		19 kA	—	810	2 ms	
170M6793		—	65 kA	810	2 ms	
170M6793		23 kA	—	810	2 ms	
170M6794		—	65 kA	810	2 ms	
170M6794		27.5 kA	—	810	2 ms	
170M6828		—	65 kA	810	2 ms	
170M6828		37 kA	—	810	2 ms	
170M6934	Acceptable	—	105.4 kA	810	1.8 ms	Configuration A
170M6934	Acceptable	45.2 kA	—	810	1.12 ms	Configuration A
170M7560		—	100 kA	810	2 ms	
170M7560		60 kA	—	810	2 ms	

Notes:

Power Component Accessories

This section provides information on bus supply capacitors.

IMPORTANT When the DC bus system is composed of drives from the same product family and the same frame size, no additional capacitance is required. However, if drives are intermixed from different product families or frame sizes, the drive bus capacitance per amp ratio must be reviewed for compatibility.

Bus Supply Capacitors

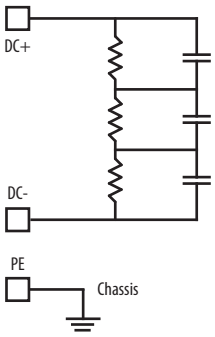

All drives have a DC bus capacitance that is proportional to their power ratings. When used in a common DC bus configuration, these capacitors are directly connected in parallel. This connection results in the DC bus ripple being shared proportional to the power rating of the drive. When the ratio of the capacitance to the drive-rated current is consistent, it provides the best DC bus ripple sharing.

For 400/480V AC, the target ratio is 40 µF/A ±10% or greater. For 600/690V AC, the target ratio is 28 µF/A ±10%. The target DC bus capacitance ratio applies to total system capacitance. The DC bus supply plus all connected inverters.

Therefore it is important to evaluate every common DC bus drive system for any mismatch. When a mismatch is found, the use of an external capacitor bank is required. The capacitor bank must be connected closest to the DC bus terminals of the largest drive.

Calculate the system capacitance (µF) per drive current rating (Amp) using Equation 1, where the DC input current and drive capacitance values are found in Appendix A.

Equation 1

$$\text{Capacitance Ratio} = \frac{\text{Total System Capacitance in Microfarads (µF)}}{\text{Total System DC Input Current in Amps (A)}}$$

If the ratio is below the respective target ratio (shown earlier), then additional capacitance is required, which can be calculated using Equation 2.

Equation 2

For 400/480: Additional Capacitance = 40 µF x DC Input Amps - Drive DC Bus Capacitance

For 600/690: Additional Capacitance = 28 µF x DC Input Amps - Drive DC Bus Capacitance

Fuse protection with diagnostic feedback is recommended and can be located internal or external to the capacitor bank. Follow the manufacturer recommendation for wire length and capacitor bank mounting.

IMPORTANT The capacitor quantity and configuration varies based on the total capacitance and DC bus voltage rating.

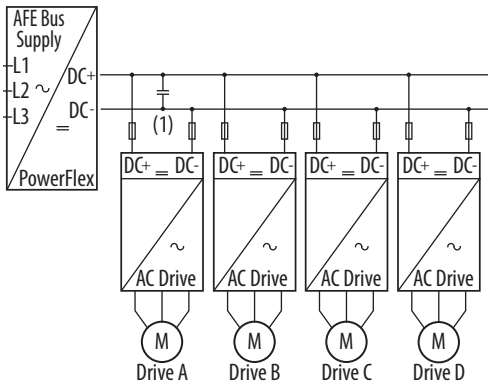

(1) If a capacitor bank is required, place the capacitor bank as close as possible to the largest drive.

Example

The following is an example of capacitance sizing and uses these characteristics.

Table 30 - Machine Characteristics

Voltage Rating	400V AC
System Ground Type	High resistive ground
Duty Rating	Normal duty

Table 31 - Drive and System Data

Drive #	Product Family	Cat. No.	Frame Size	DC Amps(1)	Internal DC Bus Capacitance (µF)(1)	Maximum External DC Bus Capacitance (µF)(1)	External Fusing Required(3)	Common Mode Core Required(3)
1	PowerFlex® 755TM	20G1D3C540MNANNNNN	8	622	9000	N/A	No	No
2	PowerFlex 755	20G11NC015AA0NNNNN	1	17	680	N/A	Yes	Yes
TOTALS				575.1(2)	9680			
Bus supply	PowerFlex 755TM	20J...C540	8	579	9000	90.20767	No	Yes

(1) This data obtained from Appendix A.
(2) Total DC Amps has the 0.9 multiplier factored in the sum.
(3) See Chapter 2 for guidance.

Table 32 - Additional Capacitance Calculations

Target System µF/A ratio	400/480V AC = 40 µF/A - 10% = 36 µF/A or greater	= (Drive Internal DC Bus Capacitance + AFE Internal DC Bus Capacitance) / (Drive DC Input Amps)
Calculated System µF/A ratio	32.5 µF/A	= (47400 µF + 23250 µF) / 1440.54 A
Additional Capacitance Required	4324 µF	= (40 x 575.1 A) - (9680 µF + 9000 µF)

Table 33 - Sample Bill of Material

Cat. No.	Qty.	Description
PN-50085 or ER-101011	1	Ground Fault Indicator Filter
20J1F3C540LNDNNNNN-P50	1	PowerFlex 755T Bus Supplies, Air Cooled, Regenerative & Low Harmonic Bus Supply (PowerFlex 755TM), Type 1/IP21, Floor Mount, LD - 364kW (628A), ND - 336kW (579A), HD - 286kW (494A), 400 VAC, 3 PH, Frame 8, Standard EMI Protection, Door Mounted HIM (20-750-C6S) & TotalFORCE Control
20G1D3C540MNDNNNNN-C11	1	PowerFlex 755T Drives, Air Cooled, Common Bus Inverter with DC Precharge (PowerFlex 755TM), Type 1/IP21, Floor Mount, LD - 315kW (585A), ND - 315kW (540A), HD - 250kW (460A), 400 VAC, 3 PH, Frame 8, Standard EMI Protection & Reflected Wave (dV/dT) Filtering, Door Mounted HIM (20-750-C6S) & TotalFORCE Control
20G11NC015AA0NNNNN	1	PowerFlex 755 AC Drive, with Embedded EtherNet/IP, Air Cooled, AC Input with DC Terminals, Open Type, 15.4 Amps, 7.5 kW ND, 5.5 kW HD, 400V AC, 3 PH, Frame 2, Filtered, CM Jumper Removed, DB Transistor, Blank (No HIM)
HSJ25	2	600VAC 25 A Class J HS Fuse
1321-M048	1	Common Mode Choke, 45 A, Open Style

Common Mode Core

The common mode core (CMC) is a passive ring or disk shaped filter that is compromised of ferrite material, which is designed to attenuate any high frequency transient or disturbance on the wire or cable passing through it. This attenuation minimizes the risk of common mode interference to other circuitry.

Depending on the device that is used as the DC bus supply, the common mode core can be installed in the locations that are shown in this diagram.

Figure 14 - Common Mode Core Locations

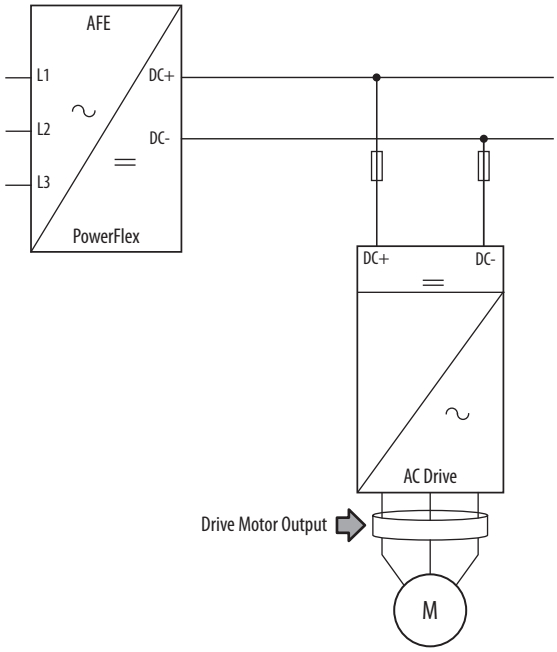

Usage With Regenerative Bus Supply

For systems with a PowerFlex 755TM regenerative bus supply, see the following table. See Figure 14 for locations.

Drive Product Family	Drive Motor Output(1)
PowerFlex 750-Series	Fr. 1…3: 1321-M048 Fr. 4…6: 1321-M180 Fr. 7: SK-Y1-CMCORE1
PowerFlex 755TM common bus inverters	Fr. 8…12: Not required(2)
Kinetix® 5700 servo drives	Not required

(1) One common mode core at each drive motor output unless an output reactor dv/dt filter is used.
(2) For PowerFlex 755TM common bus inverters, there are no provisions for AC output common mode cores; however, an optional reflective wave filter is available. See catalog number position 11- filtering and CM cap configuration, EMI solutions.

Various core shapes are available to accommodate different arrangements of wire diameters and turn ratios.

External Common Mode Core Options for Drive

The following external common mode core options are available.

Option	Part No.	Additional Resources
1	1321-M048	For more information, see 1321-Mxxx Common Mode Chokes, publication 1321-IN001 or Power Conditioning Products Technical Data, publication 1321-TD001
2	1321-M180	
3	1321-M670	
4	SK-Y1-CMCORE1	Contact factory for more information. See Figure 15 for design details.

Figure 15 - Drive Common Mode Core Option 4 (SK-Y1-CMCORE1) Mounting Dimensions

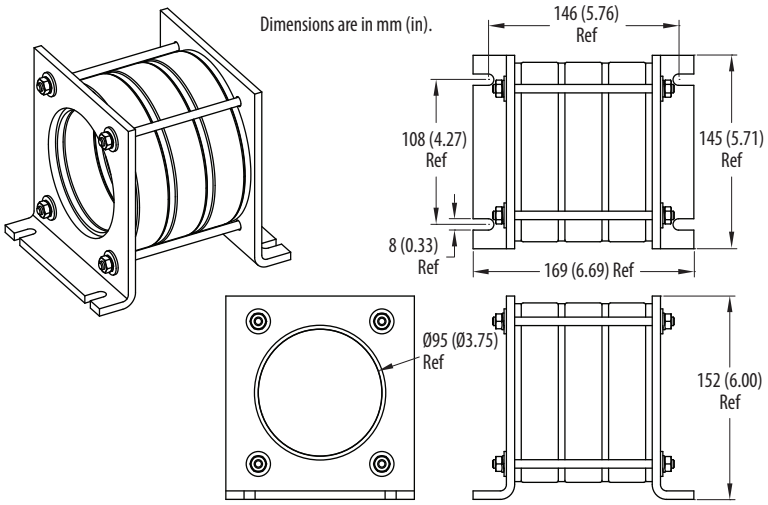

Internal EMC Plate and Cores for Drive

The following internal EMC plate and core options are available.

Option	PowerFlex 750-Series Drive	Voltage	Part No.(2)	Additional Resources
1	Frame size 1	400/480	20-750-EMC1-F1	See PowerFlex 750-Series EMC Plate and Core(s) - Frames 1…7 Installation Instructions, publication 750-IN006 for more details.
2	Frame size 2	400/480	20-750-EMC1-F2	
3	Frame size 3	400/480	20-750-EMC1-F3	
		600/690	20-750-EMC3-F3	
4	Frame size 4	400/480	20-750-EMC1-F4	
		600/690	20-750-EMC3-F4	
5	Frame size 5	400/480	20-750-EMC1-F5	
		600/690	20-750-EMC3-F5	
6	Frame size 6 in IP20 enclosure	600/690(1)	20-750-EMC3-F6	
	Frame size 6 in IP54 enclosure		20-750-EMC5-F6	
7	Frame size 7 in IP20 Enclosure	600/690(1)	20-750-EMC3-F7	
	Frame size 7 in IP54 Enclosure		20-750-EMC5-F7	

(1) Internal EMC plate and cores are not available for 400/480 volt drives.
(2) These cores are only used for EMC compliance. They are not meant to be used to reduce circulating common mode currents.

Ground Fault Indicator Filter

A ground fault occurs when there is an imbalance of current in a system. The sum of the currents entering the node must equal the sum leaving the node. The largest cause of the ground fault is the leakage current through power devices and other high impedance paths to ground.

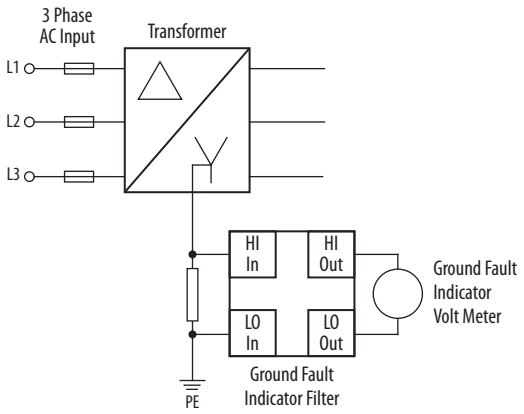

In high-resistance or ungrounded systems, a ground fault sensor is placed across the resistor to sense or detect these currents. When the threshold has been exceeded, the sensor provides an alarm output that can initiate safety circuitry to disable a system.

The current waveform associated with a drive has a harmonic-rich current signature that can cause the ground fault indicator filter to trip. The filter is designed to average the current signature, while still providing protection.

Follow the manufacturer recommendation to mount the ground fault indicator filter.

The NEMA 1 enclosure is 226 x 335 x 335 mm (8.9 x 13.2 x 13.2 in.) and weighs 26 kg (57.3 lb).

Supplier Reference: Contact factory for PN-50085 or Bryne & Schaefer for ER-101011.

Zig-zag Transformer

When an ungrounded system is used for power distribution, a zig-zag transformer can be used to create an artificial neutral for sensing ground faults. A typical ground fault-detection arrangement has a zig-zag transformer that sources a neutral resistor with a ground fault indicator filter sense circuit.

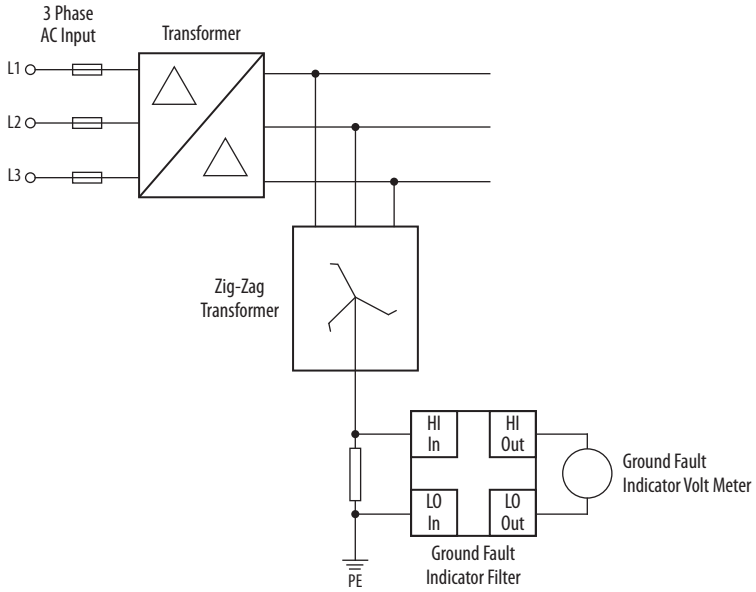

Contact the factory or a transformer manufacturer for recommendations.

PowerFlex 755TM Product

The following sections are related specifically to a PowerFlex 755TM product.

Control Pod Rule

Every PowerFlex 755TM common bus inverter in the common bus system needs one control pod. This can be achieved by combinations of C11 - single pod (with control bay) and or C12 - dual pod (with control bay) control options.

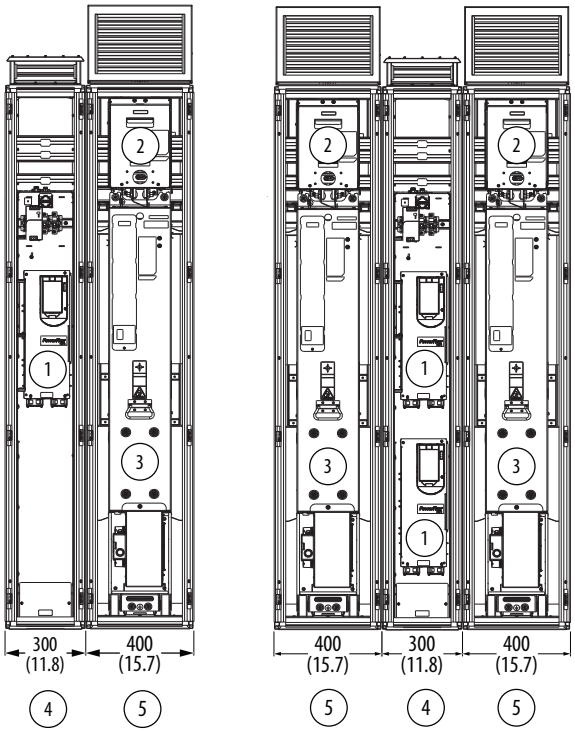

Item	Description
1	Control pod
2	DC precharge module (optional)
3	Motor side inverter
4	Control bay (optional)
5	Power bay

-P46 System DC Bus (4700 Amp)

This rule is to make sure that all systems with PowerFlex 755TM 20J regenerative bus supply and PowerFlex 755TM 20G common bus inverters have the same bus bar rating throughout the system. That rating is either 3000 A or 4700 A at 40 °C ambient temperature.

Make sure all drive = 20G, with input type = D or E, frame = 8 or 9 or 10 and drive = 20J, input type = F, frame = 8 or 9 or 10 catalog numbers have the -P46 power option in it.

If the sum of all the inverter drives' DC input amps within the system (with the 0.9 multipler for voltage boast) is greater than 3000 Amps DC

Or...

If any drive on the system is a Drive = 20G, with input type = D or E, frame = 11 or 12

Or...

If any drive = 20G, with input type = D or E, frame = 8 or 9 or 10 has a -P46 in its respective catalog number

TIP All drive = 20J, input type = F, frames 11 and 12 or drive = 20G, input type = D or E, frames 11 and 12 will come with 4700 A DC rated system bus bars installed as a standard offering. Option -P46 will not be available as an option in these scenarios.

The DC bus is shown in the following illustrations.

Figure 16 - Frame 10 Bus Supply (layout is typical for other Frames 10...12)

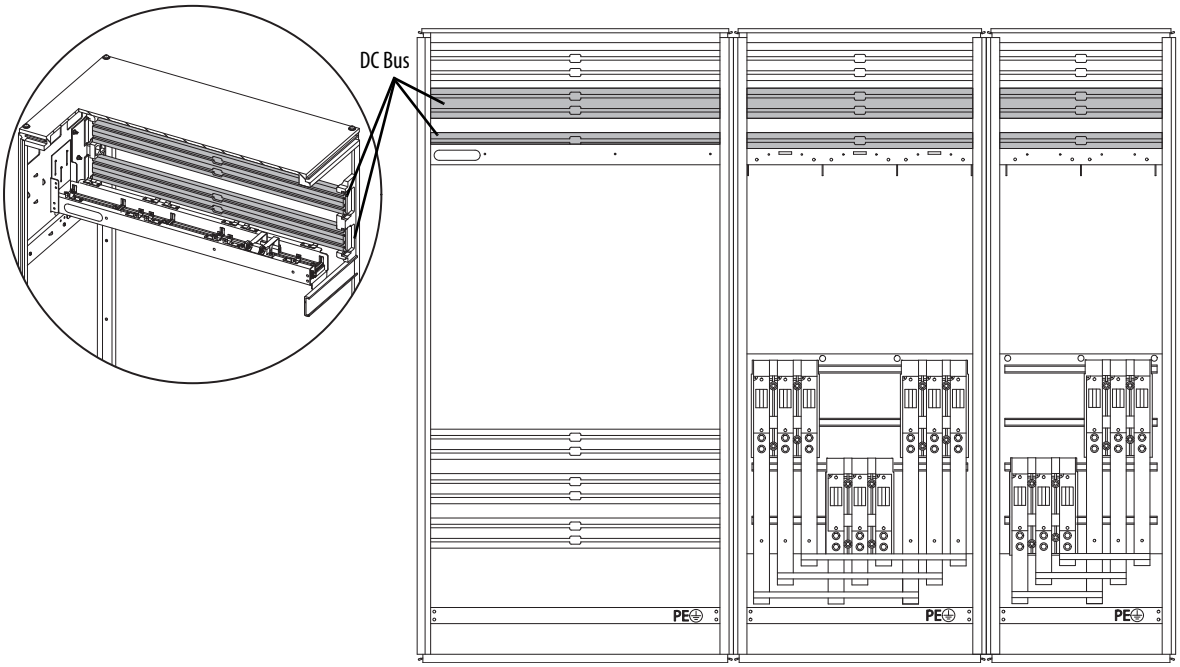

Figure 17 - Frame 10 Common Bus Inverter (layout is typical for other Frames 10...12)

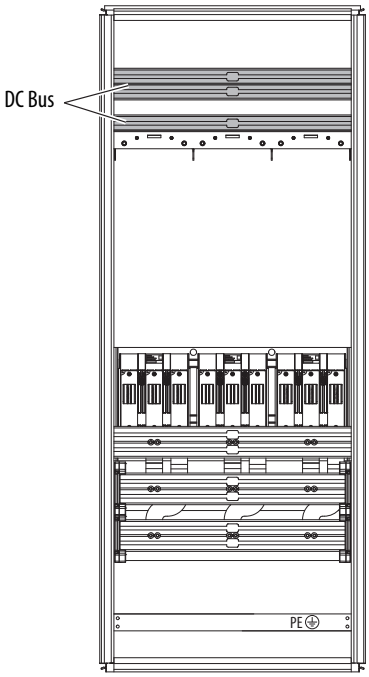

-P50 Bus Conditioner

DC bus conditioner- 400 / 480 / 600 / 690V, 14.1 µF, 100 W

A DC bus conditioner unit is 210 x 156 x 89 mm (8.3 x 6.1 x 3.5 in.) and weighs 2.29 kg (5.05 lb). It has a fuse indicator and heat sink thermal switch tied in and monitored by the IGBT power structure. It is located at the top of the power bay behind the DC bus bars and is installed in the drive at the factory.

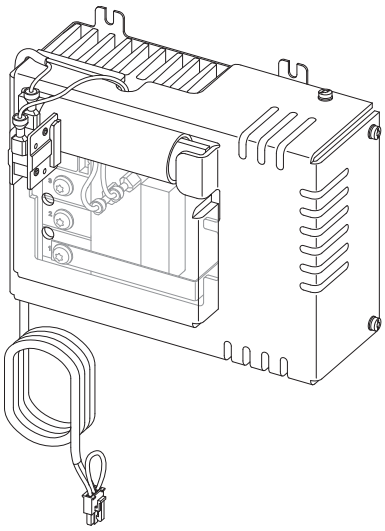

Supplier Reference: For replacement, contact the factory for 20-750-MDCBUS-COND.

Notes:

Rockwell Automation Support

Use the following resources to access support information.

Technical Support Center	Knowledgebase Articles, How-to Videos, FAQs, Chat, User Forums, and Product Notification Updates.	https://rockwellautomation.custhelp.com/
Local Technical Support Phone Numbers	Locate the phone number for your country.	http://www.rockwellautomation.com/global/support/get-support-now.page
Direct Dial Codes	Find the Direct Dial Code for your product. Use the code to route your call directly to a technical support engineer.	http://www.rockwellautomation.com/global/support/direct-dial.page
Literature Library	Installation Instructions, Manuals, Brochures, and Technical Data.	http://www.rockwellautomation.com/global/literature-library/overview.page
Product Compatibility and Download Center (PCDC)	Get help determining how products interact, check features and capabilities, and find associated firmware.	http://www.rockwellautomation.com/global/support/pcdc.page

Documentation Feedback

Your comments will help us serve your documentation needs better. If you have any suggestions on how to improve this document, complete the How Are We Doing? form at http://literature.rockwellautomation.com/idc/groups/literature/documents/du/ra-du002_-en-e.pdf.

Rockwell Automation maintains current product environmental information on its website at http://www.rockwellautomation.com/rockwellautomation/about-us/sustainability-ethics/product-environmental-compliance.page.

Rockwell Otomasyon Ticaret A.Ş., Kar Plaza İş Merkezi E Blok Kat:6 34752 İçerenköy, İstanbul, Tel: +90 (216) 5698400

www.rockwellautomation.com

Power, Control and Information Solutions Headquarters

Americas: Rockwell Automation, 1201 South Second Street, Milwaukee, WI 53204-2496 USA, Tel: (1) 414.382.2000, Fax: (1) 414.382.4444
Europe/Middle East/Africa: Rockwell Automation NV, Pegasus Park, De Kleetlaan 12a, 1831 Diegem, Belgium, Tel: (32) 2 663 0600, Fax: (32) 2 663 0640
Asia Pacific: Rockwell Automation, Level 14, Core F, Cyberport 3, 100 Cyberport Road, Hong Kong, Tel: (852) 2887 4788, Fax: (852) 2508 1846

Publication DRIVES-AT005A-EN-P - February 2017